T.O. 12R2-3BC-112

HANDBOOK
MAINTENANCE INSTRUCTIONS

RADIO RECEIVERS

BC-224-F BC-224-K BC-348-H
BC-348-K BC-348-L BC-348-R

REVISION NOTICE

LATEST REVISED PAGES SUPERSEDE THE SAME PAGES OF PREVIOUS DATE

Insert revised pages into basic publication. Destroy superseded pages.

PUBLISHED UNDER AUTHORITY OF THE SECRETARY OF THE AIR FORCE

AF-WP-REPRINT-O-JUN 60 800

20 JULY 1945
REVISED 15 APRIL 1957

Reproduction for non-military use of the information or illustrations contained in this publication is not permitted without specific approval of the issuing service (BuAer or USAF). The policy for use of Classified Publications is established for the Air Force in AFR 205-1 and for the Navy in Navy Regulations, Article 1509.

LIST OF REVISED PAGES ISSUED

INSERT LATEST REVISED PAGES. DESTROY SUPERSEDED PAGES.

NOTE: The portion of the text affected by the current revision is indicated by a vertical line in the outer margins of the page.

Page No.	Date of Latest Revision
*4-6 -- 5-0	15 April 1957
*5-1	15 April 1957
5-8	11 May 1948
7-18	11 February 1955

* The asterisk indicates pages revised, added or deleted by the current revision.

ADDITIONAL COPIES OF THIS PUBLICATION MAY BE OBTAINED AS FOLLOWS:

USAF ACTIVITIES.—In accordance with Technical Order No. 00-5-2. USAF
NAVAL ACTIVITIES.—Use Publications and Forms Order Blank (NavAer 2126) and submit to the nearest publications supply point listed below: NAS, Alameda, Calif.; NAS, Jacksonville, Fla.; NAS, Norfolk, Va.; NAS, San Diego, Calif.; NAS, Seattle, Wash.; NASD, ASO, Guam; NASD, Philadelphia, Pa.
For listing of available publications see Naval Aeronautic Publications Index (NavAer 00-500).

TABLE OF CONTENTS

Section	Page
Destruction of Abandoned Materiel in the Combat Zone	v
Unsatisfactory Report	v
Safety Notice	iii, 1–1
I. GENERAL DESCRIPTION	1–1
1. General	1–1
2. Equipment Supplied	1–2
3. Equipment Required but Not Supplied	1–2
4. Radio Receiver BC-348-(*) or BC-224-(*)	1–2
a. Cabinet	1–2
b. Chassis	1–4
c. Panel	1–4
d. Dial and Mask Assembly	1–4
e. Illumination	1–4
5. Mounting FT-154-(*)	1–4
6. Mounting FT-167-(*)	1–5—2–1
7. Plug PL-P103, PL-Q103, and PL-Q103-A	1–5—2–1
II. INSTALLATION AND ADJUSTMENT	1–5—2–1
1. Unpacking the Equipment	1–5—2–1
2. Bench Test	1–5—2–1
a. Test Equipment Required	1–5—2–1
b. Check of Receiver Output Impedance Connection	2–2
c. Setting Up the Equipment	2–2
d. Adjusting the Signal Generator	2–2
e. Tuning in a Signal	2–2
f. Checking Dial Light Operation	2–2
g. Checking CW Operation	2–2
h. Checking Crystal Operation	2–2
i. Checking Calibration of 200 to 500 Kilocycle Band	2–2
j. Checking Calibration of Other Bands	2–3
3. Installation	2–3
a. Antenna	2–3
b. Mounting FT-154-(*)	2–3
c. Mounting FT-167	2–3
d. Radio Receiver BC-348-(*) and BC-224-(*)	2–3
Safety Notice	viii, 1–1
5. Adjustments	2–3
6. After-Installation Tests	2–3
III. OPERATION	2–4—3–0
1. Starting and Stopping the Equipment	2–4—3–0
2. Operation	2–4—3–0
a. Modulated Signal Reception	2–4—3–0
b. C-W Reception	2–4—3–0
IV. THEORY OF OPERATION	3–1—4–1
1. General	3–1—4–1
2. Frequency Range and Frequency Bands	3–1—4–1
3. Detailed Functioning	3–1—4–1
a. Input Coupling	3–1—4–1
b. Input Protection	3–1—4–1
c. Radio Frequency Amplifier	3–1—4–1
d. First Detector	3–1—4–1
e. Heterodyne Oscillator	4–3
f. Intermediate Frequency Amplifier	4–3
g. C-W Oscillator	4–3
h. Crystal Band-Pass Filter	4–3
i. Second Detector	4–5
j. Output Circuit	4–5
k. Dynamotor DM-28-(*) or DM-24-(*)	4–6—5–0
V. MAINTENANCE	4–6—5–0
1. Inspection	4–6—5–0
a. Pre-flight Inspection	4–6—5–0
b. Daily Inspection	4–6—5–0
c. 100-Hour (Navy 120-Hour) Inspection	4–6—5–0
2. Trouble Location and Remedy	5–1
a. General	5–1
b. Weak or No Signals on All Bands, Modulated Reception	5–2
c. Weak or No Signals on Any One Band, Modulated Reception	5–4
d. Weak or No Signals on All Bands, C-W Reception (Modulated Reception Normal)	5–4
e. Noisy Operation	5–4
3. Voltage and Resistance Measurements	5–4

TABLE OF CONTENTS—Continued

Section		Page
4.	Alignment	5–6
	a. Alignment of I-F Amplifier	5–6
	b. Alignment of R-F Amplifier	5–7
	c. Alignment of Heterodyne Oscillator	5–7
5.	Special Maintenance Procedures	5–7
	a. Care and Servicing of Dynamotor DM-28-(*) or DM-24-(*)	5–7
	b. Removal of Front Panel	5–10
	c. Dial and Mask Assembly	5–10
	d. Removal and Replacement of Dial Mechanism	5–10
	e. Removal of Antenna, R-F, Detector, and Oscillator Units	5–11
6.	Replacement of Fuses and lamps	5–12—6–0
7.	Lubrication Data	5–12—6–0
VI.	SUPPLEMENTARY DATA	5–12—6–0
1.	Tube Complement	5–12—6–0
2.	Lamp Complement	5–12—6–0
3.	Fuse Complement	5–12—6–0
4.	Frequency Range	5–12—6–0
5.	Performance Data	5–12—6–0
	a. Selectivity	5–12—6–0
	b. Sensitivity	6–1
	c. Dynamotor Performance Data	6–2
VII.	TABLE OF REPLACEABLE PARTS	7–1
1.	Content and Arrangement of Table	7–1
2.	Ordering Spare Parts	7–1
	a. General	7–1
	b. U. S. Army Personnel	7–1
3.	Explanation of Symbols Used	7–1
	a. Reference Symbols (Column One)	7–1
	b. Cross-Hatch Symbol (Column Two)	7–1
4.	Abbreviations	7–1
5.	Decimal Equivalents of Wire Sizes of AWG and SWG (British)	7–2
	Resistor Color Codes	7–3
	Capacitor Color Codes	7–4—7–5
	Table of Replaceable Parts	7–6
VIII.	DRAWINGS	8–1

★

LIST OF TABLES

Table		Page
1–1.	Component Units of Radio Receiver BC-348-(*) or BC-224-(*)	1–2
1–2.	Equipment Required but Not Supplied with Radio Receiver BC-224-(*) or BC-348-(*)	1–2
5–1.	Voltage to Ground, C-W Oscillator Off	5–5
5–2.	Voltage to Ground, C-W Oscillator On	5–5
5–3.	Resistance to Ground (Ohms), C-W Oscillator Off "AVC-OFF-MVC" Switch Setting	5–6
5–4.	Resistance to Ground (Ohms), C-W Oscillator On "AVC-OFF-MVC" Switch Setting	5–6
5–5.	Alignment Data	5–7
6–1.	Tube Complement	5–12—6–0
6–2.	Lamp Complement	5–12—6–0
6–3.	Fuse Complement	5–12—6–0
6–4.	Frequency Range	5–12—6–0
6–5.	Selectivity Data	6–1
6–6.	Sensitivity Data	6–1
6–7.	Dynamotor Performance Data	6–2

★

LIST OF ILLUSTRATIONS

Figure		Page
1–1.	Radio Receiver BC-348-(*) or BC-224-(*)	1–0
1–2.	Bottom and Back View of Cabinet Radio Receiver BC-348-(*) or BC-224-(*)	1–3
1–3.	Radio Receiver BC-348-(*) or BC-224-(*)—Front View of Chassis with the Tube Shelf Cover Removed	1–3

LIST OF ILLUSTRATIONS—Continued

Figure		Page
1–4.	Mounting FT-154-(*) with Plug PL-103 Attached	1–4
1–5.	Mounting FT-167	1–5—2–1
4–1.	Radio Receiver BC-348-(*) or BC-224-(*)—Block Diagram	4–2
4–2.	C-W Oscillator Switching, Simplified Diagram	4–4
4–3.	Details of Crystal Filter Circuit	4–4
4–4.	Load Compensator and Bleeder Circuit, Simplified Diagram	4–5
5–1.	Trouble Location and Correction Diagram	5–2
5–2.	Radio Receiver BC-348-(*) or BC-224-(*)—Dynamotor and Tube Socket Voltages	5–3
5–3.	Dynamotor DM-28-(*) or DM-24-(*) and View Showing Filter	5–8
5–4.	Dynamotor DM-28-(*) or DM-24-(*)—Disassembled	5–9
6–1.	Radio Receiver BC-348-(*) or BC-224-(*)—Top View of Chassis	6–2
6–2.	I-F Transformers, C-W Oscillator and Crystal Filter Assemblies	6–3
6–3.	Antenna Unit	6–4
6–4.	R-F Unit	6–5
6–5.	Detector Unit	6–6
6–6.	Oscillator Unit	6–7
6–7.	Radio Receiver BC-348-(*) or BC-224-(*)—Resistor Boards View A	6–8
6–8.	Radio Receiver BC-348-(*) or BC-224-(*)—Resistor Boards View B	6–8
6–9.	Radio Receiver BC-348-(*) or BC-224-(*)—Bottom View of Chassis	6–9
6–10	Radio Receiver BC-348-(*) or BC-224-(*)—Rear View of Chassis	6–9
8–1.	Plug Connections	8–2
8–2.	Radio Receiver BC-348-(*) or BC-224-(*)—Wiring Diagram, Tube Shelf	8–3
8–3.	Radio Receiver BC-348-(*) or BC-224-(*)—Wiring Diagram, Antenna Unit (does not include Radio Receiver BC-348-R)	8–4
8–4.	Radio Receiver BC-348-R—Wiring Diagram, Antenna Unit	8–5
8–5.	Radio Receiver BC-348-(*) or BC-224-(*)—Wiring Diagram, R-F Unit	8–6
8–6.	Radio Receiver BC-348-(*) or BC-224-(*)—Wiring Diagram, Detector Unit	8–7
8–7.	Radio Receiver BC-348-(*) or BC-224-(*)—Wiring Diagram, Oscillator Unit	8–8
8–8.	Radio Receiver BC-348-(*) or BC-224-(*)—Wring Diagram, I-F Transformers	8–9
8–9.	Radio Receiver BC-348-(*) or BC-224-(*)—Wiring Diagram, Crystal Filter	8–10
8–10.	Radio Receiver BC-348-(*) or BC-224-(*)—Wiring Diagram, Beat Frequency Oscillator	8–11
8–11.	Radio Receiver BC-348-(*) or BC-224-(*)—Wiring Diagram, Resistor Boards	8–12
8–12.	Radio Receiver BC-348-(*) or BC-224-(*)—Wiring Diagram, Dynamotor Assembly	8–13
8–13.	Radio Receiver BC-348-(*) or BC-224-(*)—Dial and Mask Assembly	8–14
8–14.	Radio Receiver BC-348-(*) or BC-224-(*)—General View of Receiver	8–15
8–15.	Radio Receiver BC-348-(*) or BC-224-(*) — Outline Dimensional Drawing	8–16
8–16.	Radio Receiver BC-348-(*) or BC-224-(*)—Drilling Plan	8–17
8–17.	Radio Receiver BC-348-(*) or BC-224-(*)—Wiring Diagram	8–19—8–20
8–18.	Radio Receiver BC-348-(*) or BC-224-(*)—Schematic Circuit Diagram	8–21—8–22

SAFETY NOTICE

Operating Personnel are cautioned not to make any adjustments inside this equipment unless the power is turned off. When measuring voltages inside the equipment, exercise caution.

DESTRUCTION OF ABANDONED MATERIEL IN THE COMBAT ZONE

In case it should become necessary to prevent the capture of this equipment and when ordered to do so, DESTROY IT SO THAT NO PART OF IT CAN BE SALVAGED, RECOGNIZED OR USED BY THE ENEMY. BURN ALL PAPERS AND BOOKS.

Means:

1. Explosives, when provided.
2. Hammers, axes, sledges, machetes, or whatever heavy object is readily available.
3. Burning by means of incendiaries such as gasoline, oil, paper, or wood.
4. Grenades and shots from available arms.
5. Burying all debris or disposing of it in streams or other bodies of water, where possible and when time permits.

Procedure:

1. Obliterate all identifying marks. Destroy nameplates and circuit labels.
2. Demolish all panels, castings, switch- and instrument-boards.
3. Destroy all controls, switches, relays, connections, and meters.
4. Rip out all wiring and cut interconnections of electrical equipment. Smash gas, oil and water-cooling systems in gas-engine generators, etc.
5. Smash every electrical or mechanical part, whether rotating, moving, or fixed.
6. Break up all operating instruments such as keys, phones, microphones, etc.
7. Destroy all classes of carrying cases, straps, containers, etc.
8. Bury or scatter all debris.

DESTROY EVERYTHING!

★

UNSATISFACTORY REPORT

For U. S. Army Air Force Personnel:

In the event of malfunctioning, unsatisfactory design, or unsatisfactory installation of any of the component units of this equipment, or if the material contained in this book is considered inadequate or erroneous, an Unsatisfactory Report, AAF Form No. 54, or a report in similar form, shall be submitted in accordance with the provisions of Army Air Force Regulation No. 15-54 listing:

1. Station and organization.
2. Nameplate data (type number or complete nomenclature if nameplate is not attached to the equipment).
3. Date and nature of failure.
4. Radio model and serial number.
5. Remedy used or proposed to prevent recurrence.
6. Handbook errors or inadequacies, if applicable.

For U. S. Navy Personnel:

Report of failure of any part of this equipment during its guaranteed life shall be made from N. Aer. 4112, "Report of Unsatisfactory or Defective Material," or a report in similar form, and forwarded in accordance with the latest instructions of the Bureau of Aeronautics. In addition to other distribution required, one copy shall be furnished to the inspector of Naval Materiel (location to be specified) and the Bureau of Ships. Such reports of failure shall include:

1. Reporting activity.
2. Nameplate data.
3. Date placed in service.
4. Part which failed.
5. Nature and cause of failure.
6. Replacement needed (Yes—no).
7. Remedy used or proposed to prevent recurrence.

For British Personnel:

Form 1022 procedure should be used when reporting failure of radio equipment.

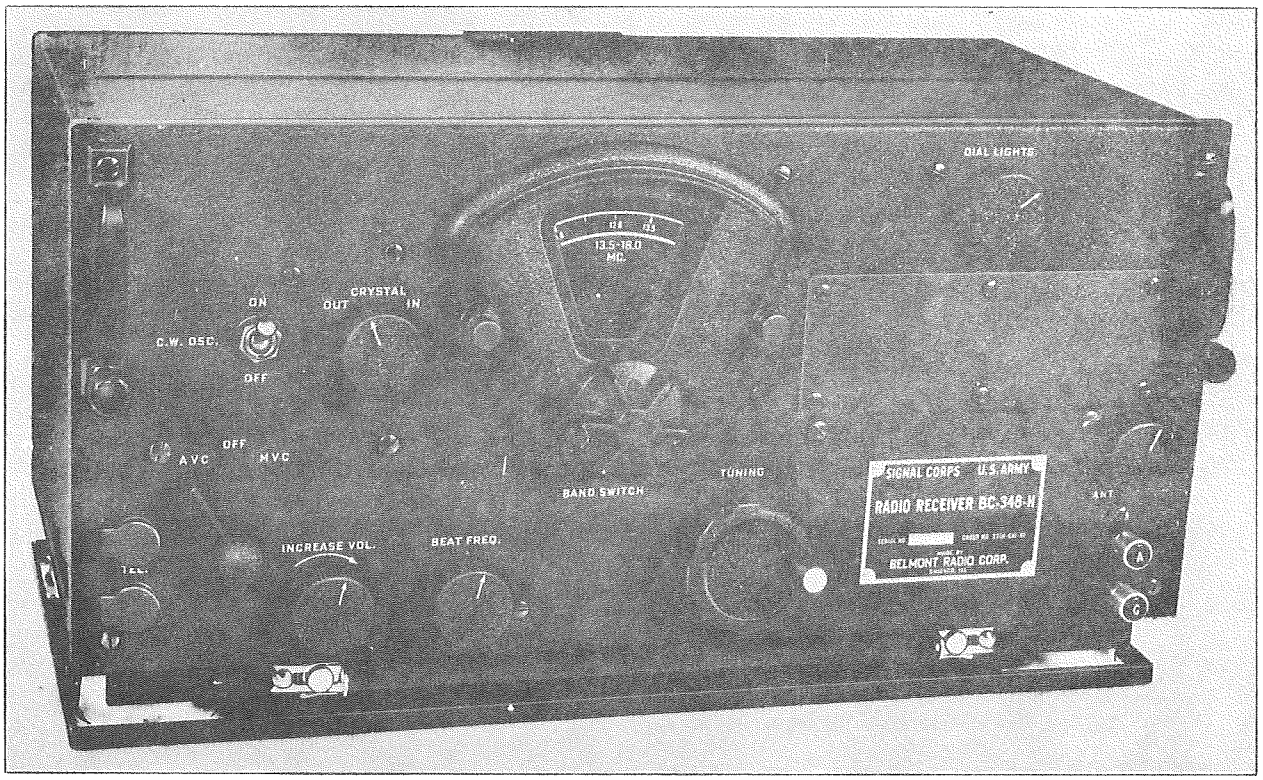

Figure 1–1. Radio Receiver BC-348-(*) or BC-224-(*)

SAFETY NOTICE

This equipment employs high voltages which can be fatal if contacted by personnel. Exercise caution when working with the equipment when potentials are exposed.

SECTION I

GENERAL DESCRIPTION

SPECIAL NOTICE

Radio Receiver BC-224-F, BC-224-K, BC-348-H, BC-348-K, BC-348-L and BC-348-R are essentially alike. Therefore, reference will be made throughout the book to these receivers as follows:

"Radio Receiver BC-224-(*) or BC-348-(*)." Reference to the dynamotors is mentioned in the same manner (Dynamotor DM-24-(*) or Dynamotor DM-28-(*), the asterisk indicating that the information applies to any model of either dynamotor.

Mounting FT-154-(*) refers to any production model of this mounting.

1. GENERAL.

(See figure 1–1.)

a. Radio Receiver BC-224-(*) or BC-348-(*) is a locally controlled, 8-tube, 6-band superheterodyne receiver for use in U. S. Army Aircraft. The receivers are not intended for remote control and no features or units have been provided for remote operation. These receivers are capable of voice, tone and c-w reception with manual or automatic volume control. When equipped with headsets, tubes, dial lights and fuses, and with the antenna, ground and primary power source connections properly made, these receivers become complete and operative equipments. All coils and the high voltage power supply units are built in the receivers.

b. Each receiver covers the frequency range 0.2 to 0.5 megacycles and 1.5 to 18 megacycles.

c. The radio receivers are essentially alike. Electrically, the filament circuit and high voltage supply units differ to permit Radio Receiver BC-224-(*) to operate from a 14-volt power source and Radio Receiver BC-348-(*) from a 28-volt power source. The total power consumed by each receiver is 56 watts. A dowel pin fastened to the chassis of Radio Receiver BC-348-(*), prevents accidental installation of the 14-volt dynamotor in the 28-volt receivers. There are minor mechanical differences between the 12-volt receiver and the 28-volt receiver, incidental to supporting electrical parts.

2. EQUIPMENT SUPPLIED.

(See Table 1–1.)

TABLE 1–1. COMPONENT UNITS OF RADIO RECEIVER BC-348-(*) OR BC-224-(*)

Quantity per Equipment	*Name of Unit*	*Army Type Designation*	*Overall Dimensions (inches)*	*Weight (pounds)*
1 ea.	Radio Receiver includes:	BC-348-(*)†	18 x 10½ x 9½	35.5
	Dynamotor (mounted on receiver)	DM-28-(*)		
	Radio Receiver includes:	BC-224-(*)	18 x 10½ x 9½	35.5
	Dynamotor (mounted on receiver)	DM-24-(*)		
1 ea.	Mounting	FT-154-(*)†	18 x 8½ x 1⅜	3.81
1 ea.	Plug	PL-P103†	2 5/16 x 2 5/32 x 2 9/16	0.34
	Plug	PL-Q103†	3 x 2 5/32 x 2 1/16	0.41
	Plug	PL-Q103-A†	3 x 2 5/32 x 2 1/16	0.41
1 ea.	Fuse (used with Radio Receiver BC-348-(*)	FU-35		
	Fuse (used with Radio Receiver BC-224-(*)			
2 ea	Lamp	FU-23		
1	Set of 9 Tubes	LM-27		0.563

† Specified as units of Radio Receiving Set AN/ARR-11.

3. EQUIPMENT REQUIRED BUT NOT SUPPLIED.

(See Table 1–2.)

TABLE 1–2. EQUIPMENT REQUIRED BUT NOT SUPPLIED WITH RADIO RECEIVER BC-224-(*) OR BC-348-(*)

Quantity per Equipment	*Name of Unit*	*Army Type Designation*	*Required Characteristics*
1	Signal Generator	I-72( )††	Capable of generating r-f output from 100 kc to 32 mc, modulated or unmodulated.
1	Jack	JK-34	
1	Headset	HS-33	Low impedance headset.
1	Mounting	FT-167	Used when required in installation.

†† Applies to any model designation except Signal Generator I-72-F.

4. RADIO RECEIVER BC-348-(*) OR BC-224-(*).

a. CABINET.—The receiver cabinet is of spot-welded aluminum construction with black wrinkle finish and is embossed on the top and back to add rigidity and strength. The panel (front) end allows the removal of the receiver chassis, which runs on the stainless steel strips mounted in the end corners of the cabinet. Two tapped inserts are placed in the rear to receive the thumb screw rods which secure the chassis in the cabinet. A cutout in the rear bottom permits the entrance of Plug PL-P103, PL-Q103 or PL-Q103-A. (See figure 1–2.) Four mounting studs are attached to the bottom of the cabinet for securing the cabinet on Mounting FT-154-(*).

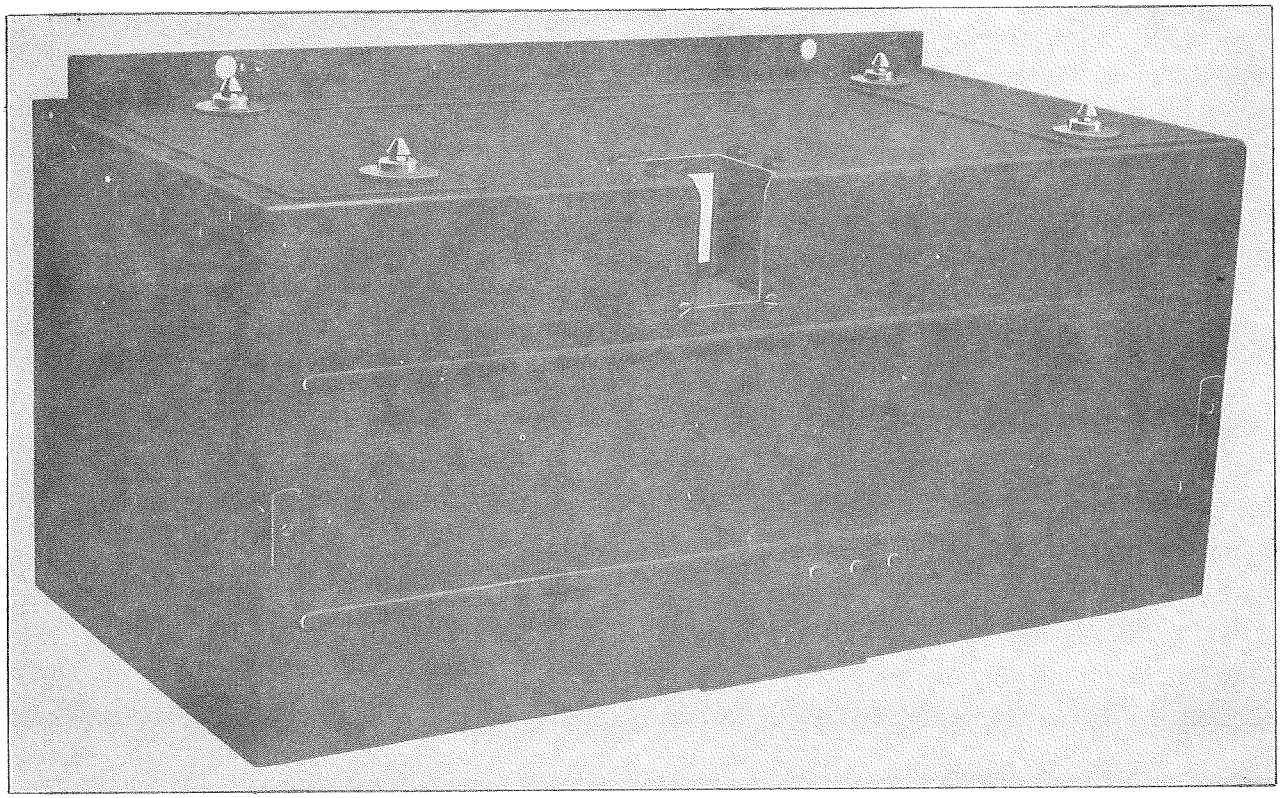

Figure 1–2. Bottom and Back View of Cabinet Radio Receiver BC-348-(*) or BC-224-(*)

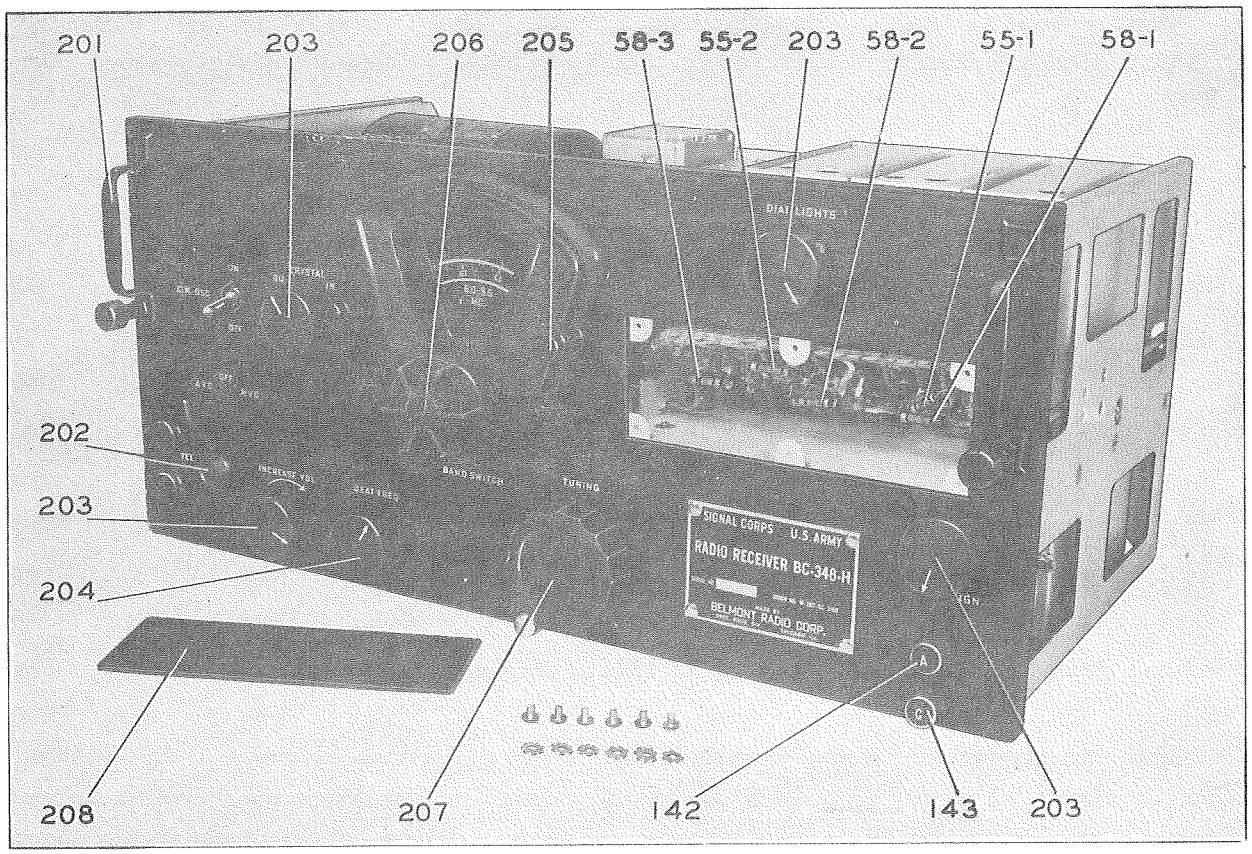

Figure 1–3. Radio Receiver BC-348-(*) or BC-224-(*)—Front View of Chassis with the Tube Shelf Cover Removed

b. CHASSIS.—The chassis consists of an aluminum casting mounted between two end plates of sheet aluminum, which serve as runners and guides when placing the chassis in the cabinet.

c. PANEL.—The front panel is attached to the chassis and to the end plates by screws. Two handles are mounted on the panel. A cutout, covered by a plate, is provided to give access to the wiring under the r-f tube shelf for servicing and maintenance. (See figure 1–3.) The following panel items are mounted on the front of the panel: Antenna and ground binding posts; antenna alignment control "ANT ALIGN"; dial lights rheostat control "DIAL LIGHTS"; tuning control "TUNING"; band switch control "BAND SWITCH": dial window housing which covers the dial lights; beat frequency control "BEAT FREQ"; crystal filter control "OUT-CRYSTAL-IN"; volume control "INCREASE VOL; AVC-OFF-MVC" control; "C.W. OSC" control; and two telephone jacks "TEL."

d. DIAL AND MASK ASSEMBLY.—The dial and mask assembly is mounted on the aluminum casting which carries the gearing of the tuning capacitor drive and the detent. The dial is divided into six frequency bands. The dial and tuning capacitor are so geared to the tuning control shaft that the tuning capacitor covers the frequency range indicated on the dial for each band in approximately 90 revolutions of the tuning knob. A mask with suitably located and marked windows is mounted before the dial. The mask is controlled by the band change switch and is positioned by the detent.

e. ILLUMINATION.—The receiver tuning dial is illuminated by means of two dial lights, Lamp LM-27, controlled by the "DIAL LIGHTS" rheostat. This rheostat has an off position when the illumination is not desired. The dial lights are located beneath a readily removable housing which permits the easy replacement of a dial lamp during flight.

5. MOUNTING FT-154-(*).

(See figure 1–4.)

The mounting is constructed of stainless steel except for the aluminum base which carries the mounting holes and the bases of four shock absorbers. To the top of the shock absorbers is fastened the stainless steel support, which provides for the attachment of the receiver cabinet by means of studs and snapslides. Grooves are provided in the stainless steel support to facilitate the engagement of the studs of the cabinet with the mounting.

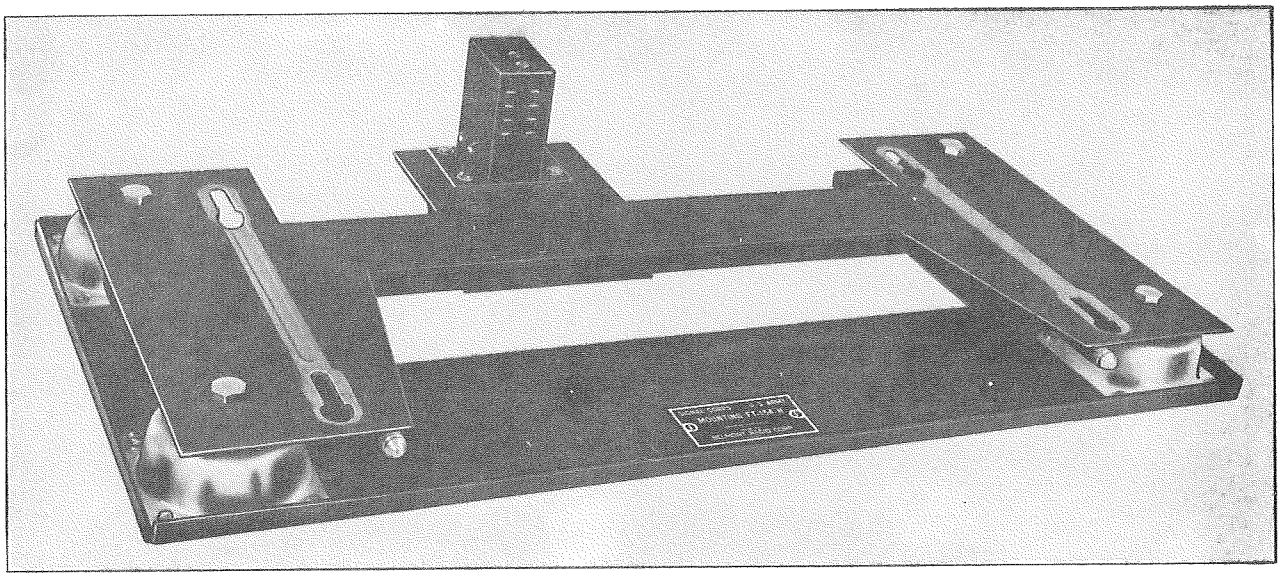

Figure 1–4. Mounting FT-154-(*) with Plug PL-103 Attached

6. MOUNTING FT-167-(*).

A steel bracket holding a rubber shock absorber may be used with some of the receivers where the sets are to be subjected to excessive vibration. This bracket is attached at the top rear of the cabinet and to the wall of the plane behind the set, thus arresting any tendency toward horizontal motion. (See figures 1–5 and 8–15.)

7. PLUG PL-P103, PL-Q103, AND PL-Q103-A.

The plug, attached to the mounting by screws, is provided with eight terminals which are accessible upon removal of the rear cover of the plug housing. Plug PL-P103 is provided with a straight outlet. A right angle outlet mounted in any of three positions, right, left or back, may be used with Plug PL-Q103 or PL-Q103-A. The positions and uses of these outlets with the plug are clearly shown on the outline dimensional drawing in Section VIII (see figure 8–15).

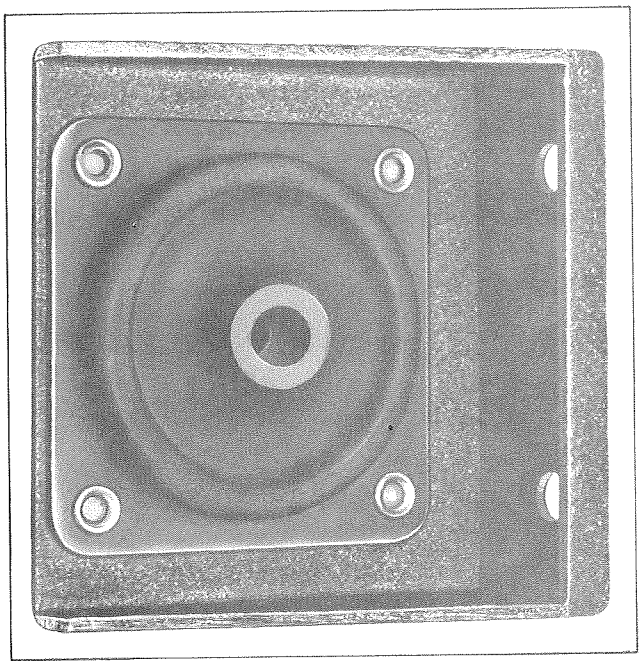

Figure 1–5. Mounting FT-167

SECTION II

INSTALLATION AND ADJUSTMENT

1. UNPACKING THE EQUIPMENT.

Unpack the equipment as follows:

a. Remove Radio Receiver BC-348-(*) or BC-224-(*) and Mounting FT-154-(*) from the packing cartons.

b. Loosen the thumbscrews at the bottoms of the handles on the receiver front panel and pull the chassis from the cabinet.

c. Remove the cardboard packing filler from over the dynamotor.

d. Check to see that the receiver is free from dust.

e. Check to see that the vacuum tubes are firm in their sockets and the fuse and dial lights are correctly and securely inserted.

f. Operate the controls on the front panel. Check for binding and sticking.

g. Examine binding posts for proper spring tension.

Note

Do not change the factory settings of potentiometers, couplings and screwdriver adjustments.

h. Slide the receiver back into its case and fasten the thumbscrews.

2. BENCH TEST.

a. TEST EQUIPMENT REQUIRED.—The following equipment is required for making a bench test of the radio receiver.

Name of Item	*Remarks*
Plug PL-P103, PL-Q103 or PL-Q103-A	Wired with terminals 3 and 4 positive and terminals 7 and 8 negative
Jack JK-34	Wired between terminals 1 and 5 on Plug PL-Q103
100 micromicrofarad condenser	To be used as a dummy antenna
Signal Generator I-72( ) or equivalent	Capable of delivering a 150 kilocycle-18 megacycle, MCW and CW signal
Single pole, single throw switch	Connected between terminals 2 and 6 of Plug PL-Q103

* Any issue is applicable.

b. CHECK OF RECEIVER OUTPUT IMPEDANCE CONNECTION.—The output of the receiver can be matched to either a 4000-ohm or a 300-ohm load. The receiver is normally connected for a 4000-ohm load unless a decalcomania on the front panel indicates otherwise. To change the output impedance of the receiver from 4000-ohms to 300-ohms proceed as follows:

(1) Loosen the thumbscrews at the bottoms of the handles on the front panel and pull the chassis from the cabinet.

(2) Remove the lead from terminal 5 ("HI") on output transformer 123-A and solder the lead to terminal 6 ("LO"). (See figure 8–17.)

(3) Return the receiver chassis to the cabinet and tighten the thumbscrews.

c. SETTING UP THE EQUIPMENT.

(1) Connect Radio Receiver BC-224-(*) to a 14-volt source of supply or Radio Receiver BC-348-(*) to a 28-volt source of supply.

(2) Place the "AVC-OFF-MVC" switch in the "OFF" position.

(3) Connect Plug PL-Q103 (wired as indicated in paragraph 2*a*, this section) to Connector SO-104. Check to see that the single pole, single throw switch connected across terminals 2 and 6 of Plug PL-Q103 is closed.

(4) Connect Signal Generator I-72-( )** to the antenna post "A" of the receiver through the 100 micromicrofarad dummy antenna.

(5) Connect the ground post "G" of the receiver to the signal generator ground connection.

d. ADJUSTING THE SIGNAL GENERATOR.

(1) Turn on the signal generator.

(2) Place the modulation switch on the signal generator in the modulation position.

(3) Set the band selector switch on the signal generator to the frequency band which includes 500 kilocycles.

(4) Adjust the signal generator frequency dial to 500 kilocycles.

e. TUNING IN A SIGNAL.

(1) Place the "AVC-OFF-MVC" switch in the "AVC" position. The dynamotor should start. Allow one minute for the receiver to warm up.

(2) Set the "BAND SWITCH" on the receiver to band one (200 to 500 kc).

(3) Adjust the receiver "TUNING" control to 500 kilocycles.

(4) Rotate the "INCREASE VOL" control on the receiver fully clockwise.

(5) Reduce the output of the signal generator until the signal is just audible.

(6) Place the "AVC-OFF-MVC" switch in the "MVC" position and adjust the receiver "TUNING" control for a maximum signal.

(7) Adjust the antenna alignment control for maximum volume in the headset.

f. CHECKING DIAL LIGHT OPERATION.

(1) Rotate the "DIAL LIGHTS" control on the receiver.

(2) Check to see that both lights are functioning, that they can be adjusted to any degree of brilliance, and that they can be turned off completely.

g. CHECKING CW OPERATION.

(1) Turn off the modulation of the signal generator.

(2) Place the "CW. OSC." switch on the receiver in the "ON" position.

(3) Rotate the "BEAT FREQ" control on the receiver. The audio frequency sound should vary in pitch. Check to see that the audio frequency sound becomes inaudible (zero beat) when the pointer on the "BEAT FREQ" control points approximately straight up.

h. CHECKING CRYSTAL OPERATION.

(1) Leave the "CW. OSC." control in the "ON" position.

(2) Place the "CRYSTAL" switch in the "IN" position. The noise should be greatly reduced.

(3) Rotate the "TUNING" control on the receiver slightly to each side of the signal. The signal should be tuned in and out with a smaller movement of the "TUNING" control knob with the "CRYSTAL" switch in the "IN" position than with the switch in the "OUT" position. The volume of the signal should be slightly less.

i. CHECKING CALIBRATION OF 200 TO 500 KILOCYCLE BAND.—Adjust the signal generator for a signal of 500 kilocycles and tune in the signal on the receiver as described in paragraphs 2*d* and 2*e*. The receiver dial reading should fall between 504 and 496 kilocycles.

Note

The frequency of the signal generator should be accurately determined for calibration of the receiver dial.

* Any issue letter is applicable.
** Refers to any model except I-72-F (25 cycles).

j. CHECKING CALIBRATION OF OTHER BANDS.—Check the calibration on the 1.5 to 3.5 megacycle band as follows:

(1) Adjust the signal generator to any frequency within the frequency band of 1.5 to 3.5 megacycles according to the procedure for adjusting the signal generator to 500 kilocycles as described in paragraph 2*d*, this section.

(2) Tune the receiver to the signal of the signal generator according to the procedure in paragraph 2*e*, this section. An audible note of the frequency of the signal generator modulation should be heard with low signal generator output into the receiver.

(3) Repeat the procedures described in paragraph 2*i* above for the 6.0 to 9.5 megacycle band, the 9.5 to 13.5 megacycle band, and the 13.5 to 18 megacycle band.

3. INSTALLATION.

a. ANTENNA.—Satisfactory operation of the receiver can be obtained with practically any type of mast, fixed, or trailing wire antenna. The receiver is to be used with the particular type of liaison receiving antenna already installed in the aircraft.

b. MOUNTING FT-154-(*).—Permanently attach the mounting to the rigid members of the aircraft so that the following conditions will be met:

(1) The receiver when installed on the mounting will be as near as possible to the antenna lead-in insulator.

(2) There will be sufficient clearance on all sides of the receiver to allow free action of the shock absorbers. (See figures 8–15 and 8–16.)

c. MOUNTING FT-167.—The use of Mounting FT-167 is optional. If the mounting is furnished and it is desired to use it in the installation, attach the mounting as shown in figure 8–15.

d. RADIO RECEIVER BC-348-(*) AND BC-224-(*).—Install the radio receiver as follows:

(1) Place the receiver on the mounting with the studs on the bottom of the cabinet entering the slots of the mounting.

(2) See that the receiver is well down on the mounting and that all four studs are securely seated.

(3) Push the cabinet towards the rear of the mounting. Be sure that the connector fits securely into the plug. Be sure the plug has not been damaged due to misalignment.

(4) Secure the receiver in place with the snapslides on the lower front corners of the cabinet.

(5) Safety wire the holes of the snapslides assemblies. Do not twist the wires too tightly.

4. ELECTRICAL CONNECTIONS.

(See figure 8–1.)

Cut a length of power cable to reach from Connector SO-104 on the rear of the receiver to the source of power and make connections as follows:

a. Connect one end of the cable to Plug PL-Q103 (if a right-angle connection is desired) or to Plug PL-P103 (if a straight connection is desired) as shown in figure 8–1.

b. Connect the other end of the power cable to a 28-volt source of power for Radio Receiver BC-348-(*) and to a 14-volt source of power for Radio Receiver BC-224-(*).

c. Connect the ground binding post "G" by a short, direct, low-resistance lead to some grounded metal portion of the aircraft and solder at that point if practicable. Allow enough slack to prevent vibration being transmitted to the receiver.

d. Connect a solid copper wire from the antenna lead-in insulator to the antenna binding post "A" on the receiver. Allow enough slack to prevent vibration being transmitted to the receiver.

e. Make sure the engine ignition system, generator, and other possible causes of disturbance are properly shielded and that bonding of metal parts is accomplished.

5. ADJUSTMENTS.

After the receiver has been bench tested and installed as directed in paragraphs 2 and 3, this section, no further adjustments are necessary before the equipment is put into operation.

6. AFTER-INSTALLATION TESTS.

Make an after-installation check of the radio receiver as follows:

a. Plug headset HS-33 into one of the jacks marked "TEL."

b. Place the "AVC-OFF MVC" switch in the "MVC" position. The dynamotor should start.

c. Allow 30 seconds for the tubes to warm up.

d. Set the "INCREASE VOL" knob until a slight background noise is heard.

e. Set the "BAND SWITCH" to the frequency band in which test signals are available.

f. Adjust the "TUNING" control to the desired frequency.

* Any issue letter is applicable.

Note

Tune in the signal with the "AVC-OFF-MVC" control in the "MVC" position and with the "INCREASE VOL" control advanced only far enough to give the desired signal strength. With the "AVC-OFF-MVC" control set at "MVC" and with the "INCREASE VOL" control in the maximum position strong carrier waves will block the receiver and intelligible signals cannot be received.

g. Place the "AVC-OFF-MVC" switch in the "AVC" position. The desired signal should still be heard.

h. Place the "BEAT FREQ" control in the zero beat position (arrow on knob pointing up).

i. Place the "CW. OSC." switch in the "ON" position. An audible beatnote should be heard which varies in pitch when the beat frequency adjustment is changed.

j. Place the "CRYSTAL" switch in the "IN" position. Noise should be greatly reduced.

Note

The signal can be tuned out by a much smaller movement of the "TUNING" knob with the "CRYSTAL" switch in the "IN" position than with the switch in the "OUT" position.

k. Turn the "DIAL LIGHTS" control to see that both dial lights are functioning.

l. Turn on the engine of the aircraft. An increase in background noise when the engine starts indicates imperfect shielding, imperfect bonding, faulty generator regulator, faulty generator open-filter capacitors, or a combination of these faults.

m. Turn off the engine of the aircraft and place the "AVC-OFF-MVC" switch on the receiver in the "OFF" position.

SECTION III

OPERATION

1. STARTING AND STOPPING THE EQUIPMENT.

a. To start the equipment place the "AVC-OFF-MVC" switch in the "MVC" position.

b. To stop the equipment place the "AVC-OFF-MVC" switch in the "OFF" position.

2. OPERATION.

a. MODULATED SIGNAL RECEPTION.

(1) Place the "AVC-OFF-AVC" switch in the "MVC" position.

(2) Place the "C.W. OSC." switch in the "OFF" position.

(3) Place the "CRYSTAL" switch in the "OUT" position.

(4) Set the "BAND SWITCH" to the desired frequency band.

(5) Adjust the "TUNING" control to the desired frequency.

Note

Always tune in a signal with the "AVC-OFF-MVC" switch in the "MVC" position and with the "INCREASE VOL" control advanced only far enough to give the desired signal strength. With the "AVC-OFF-MVC" control set at "MVC" and with the "INCREASE VOL" control set at maximum. Strong carrier waves will block the receiver and intelligible signals cannot be received.

(6) Adjust the "INCREASE VOL." control until the desired signal is heard or the background noise becomes audible.

(7) Adjust the "TUNING" control on the receiver until a maximum output for the desired signal is obtained. The receiver is now properly tuned.

(8) Adjust the "ANTENNA ALIGN" dial until the signal is loudest.

(9) If automatic volume control is desired, place the "AVC-OFF-MVC" switch in the "AVC" position and readjust the "INCREASE VOL." control for the desired output level.

b. C-W RECEPTION.

(1) Place the "AVC-OFF-MVC" switch in the "MVC" position.

(2) Place the "C.W. OSC." switch in the "ON" position.

(3) Place the "CRYSTAL" switch in the "OUT" position.

(4) Set the "BEAT FREQ" control near the zero beat position (arrow on knob pointing up).

(5) Set the "BAND SWITCH" to the desired frequency band.

(6) Adjust the "TUNING" control to the desired frequency.

(7) Adjust the "INCREASE VOL." control until the desired signal is heard or until the background noise becomes audible.

(8) Adjust the "TUNING" control on the receiver for a maximum output of the desired signal.

(9) Adjust "ANTENNA ALIGN" dial until the signal is loudest.

(10) Vary the "BEAT FREQ." control to adjust the frequency of the beat note as desired.

(11) If it is desired to use automatic volume control, place the "AVC-OFF-MVC" control in the "AVC" position and readjust the "INCREASE VOL." control.

(12) If extreme selectivity is desired, place the "CRYSTAL" switch in the "IN" position. Readjust the "TUNING," the "BEAT FREQ.," and the "INCREASE VOL." controls, if necessary, to secure the desired beat note frequency and volume level.

Note

The crystal bandpass filter is intended primarily for use in C-W reception. However, the added selectivity may at times prove helpful in receiving modulated signals through heavy interference.

SECTION IV

THEORY OF OPERATION

1. GENERAL.

(See figure 4–1.)

Radio Receiver BC-348-(*) comprises two stages of tuned radio frequency amplification followed by a first detector, a temperature compensated heterodyne oscillator, three intermediate frequency amplifier stages, a second detector and one stage of audio frequency amplification with a transformer output circuit. A crystal band-pass filter is included in order to increase the selectivity. The receiver also includes a beat-frequency oscillator in order to make c-w signals audible.

2. FREQUENCY RANGE AND FREQUENCY BANDS.

The frequency ranges of 200 to 500 kilocycles and 1.5 to 18.0 megacycles are covered in six bands which are under the control of a band change switch. The frequency range for each of the six bands is given in the following table:

Band	*Frequency Range*
1	200-500 KC
2	1.5- 3.5 MC
3	3.5- 6.0 MC
4	6.0- 9.5 MC
5	9.5- 13.5 MC
6	13.5- 18.0 MC

3. DETAILED FUNCTIONING.

a. INPUT COUPLING.—The antenna input circuit is capacitively coupled to the first tuned grid circuit by means of the antenna alignment capacitor 2. Sufficient range is available in this capacitor to permit alignment for antenna capacities within the limits of 50 to 200 micromicrofarads. The antenna input circuit is designed for antennas whose resistances are between 1 and 5 ohms.

b. INPUT PROTECTION.—The resistor 65-1 provides a leakage path for static charges which may collect on the antenna. The input circuit will withstand the application of 250 volts d.c. without damage. For protection against the application of radio frequency voltages up to 30 volts rms, the input circuit provides for the over shooting of the grid of the first r-f tube and the building up of a protective negative grid bias across the grid filter resistor.

c. RADIO FREQUENCY AMPLIFIER.—The radio frequency preselector comprises three tuned circuits coupled by two super control pentode amplifier tubes, tube JAN-6K7. Separate inductances are employed for each frequency band. The r-f gain of each of the six bands is kept uniform by selection of the turn ratio between the grid and plate circuit for each of the respective bands. A relatively low signal level is maintained at the grid of the first detector tube, thus insuring freedom from cross modulation interference.

d. FIRST DETECTOR.—The first detector em-

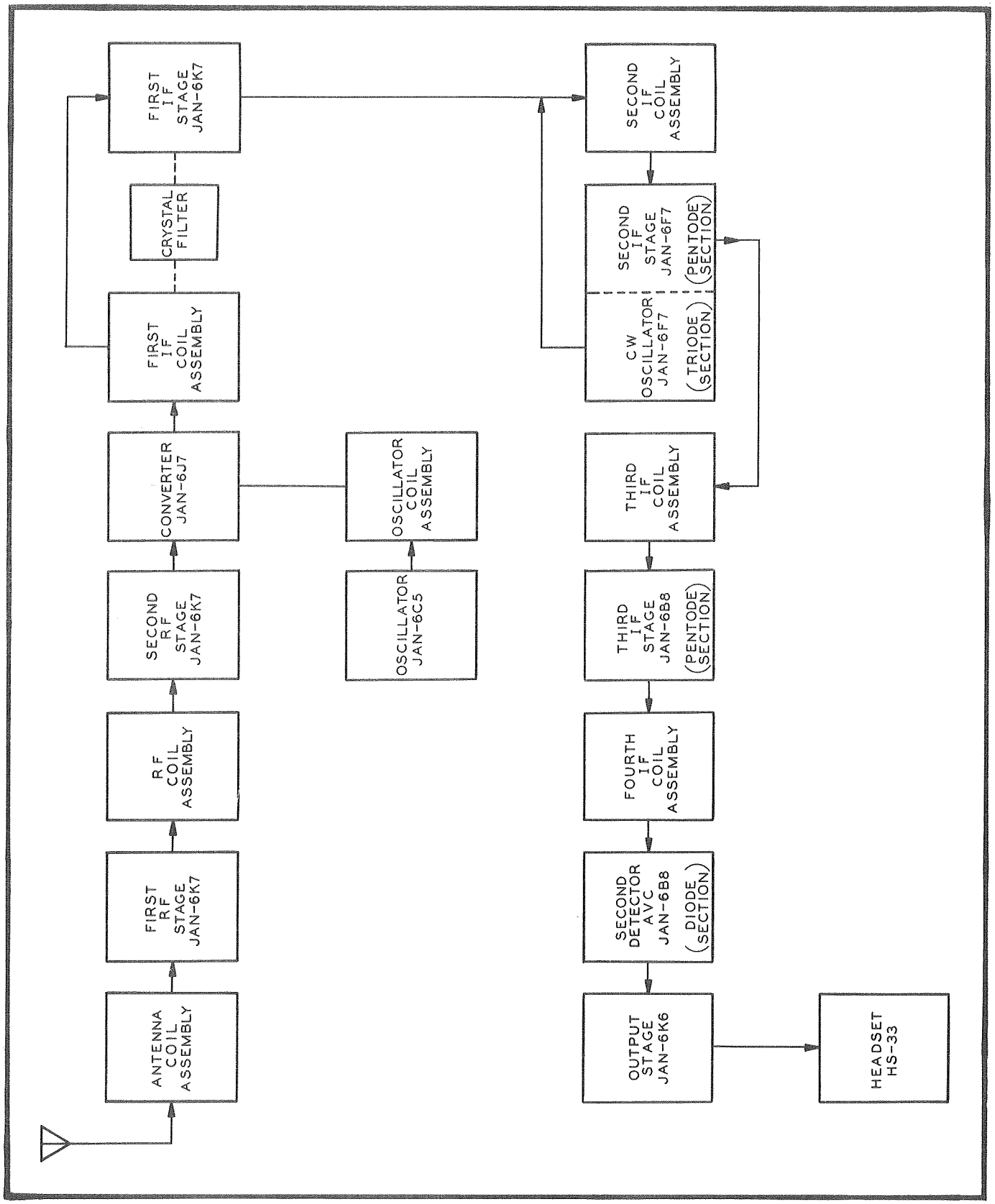

Figure 4–1. Radio Receiver BC-348-(*) or BC-224-(*)—Block Diagram

ploys tube JAN-6J7 which has a sharp cutoff characteristic. The low signal level at the grid of the first detector, together with the r-f preselection, insures a minimum of undesired responses. The oscillator output is coupled into the cathode circuit of this tube, and separate cathode coupling coils provide optimum oscillator output for each frequency band.

e. HETERODYNE OSCILLATOR.—The heterodyne oscillator employs a tuned grid, plate feedback circuit, utilizing a triode tube JAN-6C5. Oscillator frequency stability over wide variations in ambient temperature under service conditions has been obtained by the use of temperature compensated ceramic fixed capacitors (40, 41, 42, 43, 44, 45 and 46.) Individual inductances and trimmers are employed for each frequency band. The low impedance coupling to the cathode of the first detector insures frequency stability with load variations or detector circuit tuning. On the four lower frequency tuning bands the oscillator frequency is higher than the desired signal by the intermediate frequency. On the two higher frequency ranges, bands 5 and 6, the oscillator is on the low frequency side of the desired signal. The latter results in a more uniform tuning ratio over these bands and increases the image rejection ratio.

f. INTERMEDIATE FREQUENCY AMPLIFIER.—The intermediate frequency amplifier comprises three low gain amplifying stages coupled by four high selective, double-tuned circuit transformers. The intermediate frequency employed is 915 kilocycles. The i-f transformers are tuned by means of adjustable iron cores and fixed capacitors. The increased permeability resulting from the use of the iron cores contributes largely to the highly selective transformer characteristics. The lowered tuned circuit impedance, secured by the relatively large fixed tuning capacitors, provides an inherently stable amplifier. Tube JAN-6K7 functions as the first i-f amplifier while the pentode section of Tube JAN-6F7 is employed as the second i-f amplifier. Tube JAN-6B8 as the third i-f amplifier, supplies a relatively high level signal to the diodes of this same tube.

g. C-W OSCILLATOR.

(1) The c-w oscillator employs the triode section of tube JAN-6F7 (second i-f amplifier tube) in a tuned grid plate feedback circuit. The adjustable iron core in the grid inductance 121 is employed for rough frequency alignment. A small panel-operated beat frequency control permits fine adjustment of the beat frequency within a range of approximately 4,000 cycles each side of zero. The effects of ambient temperature variations are minimized by the use of a temperature compensated tuned circuit. The c-w oscillator operates at an extremely low level, minimizing harmonics and stray oscillator pickup. The output is capacitively coupled to the plated circuit of the second amplifier tube by the coupling lead connected to the oscillator grid. Amplification by the third i-f amplifier stage, whose gain is not controlled either by manual or a-v-c, provides sufficient output from the c-w oscillator to the diode detector. This value of oscillator output is somewhat below the level at which the a-v-c operates, thus permitting the use of automatic volume control even for c-w reception.

(2) The C.W. OSC. switch 128 in the ON position supplies the oscillator plate voltage and increases the a-v-c time constant by connecting the additional capacitor 123-C. Switch 128 supplies the oscillator plate voltage by connection to the screen grids of the first and second i-f and first r-f tubes. The same switching connects the loading resistor 58-4. This drops the screen voltage to the first and second i-f and first r-f tubes to a value that reduces the sensitivity sufficiently to keep the overall set noise essentially constant. This arrangement for supplying the c-w oscillator has added advantages which are not obvious. For sufficient oscillator excitation to handle high detector levels, encountered with a-v-c delay operation and strong signal inputs (while still keeping the no-signal c-w excitation below the a-v-c level,) the c-w oscillator output should increase as a strong signal input raises the a-v-c bias. This circuit arrangement, Figure 4–2, accomplishes this result, since with switch 129 in the a-v-c position, resistors 57-6, 74, 70, and 79-A form a fixed bleeder supplying the screen grid voltage to r-f, first detector and i-f tubes. A strong input signal building up the a-v-c bias causes a considerable decrease in screen current and hence an increase in the screen supply voltage. This increases the voltage supplied to the c-w oscillator, and hence the excitation increases in proportion to signal level at the detector.

h. CRYSTAL BAND-PASS FILTER. (See fig. 4–3) —Additional selectivity is available by the use of the i-f crystal filter preceding the first i-f amplifier tube. This crystal filter comprises a balanced capacity bridge circuit which may be adjusted internally to provide a band width of 800 to 3,000 cycles at 10X down from resonance. The tapped tuned circuit (118 and 34-1) matches the impedance of the crystal bridge to the first i-f grid. The crystal filter may be switched in or out of the circuit by the CRYSTAL OUT-IN switch 127, actuated from the front panel. The symmetry of the resonance curve is adjustable by the balancing capacitor 8. The filter band width is adjustable by the

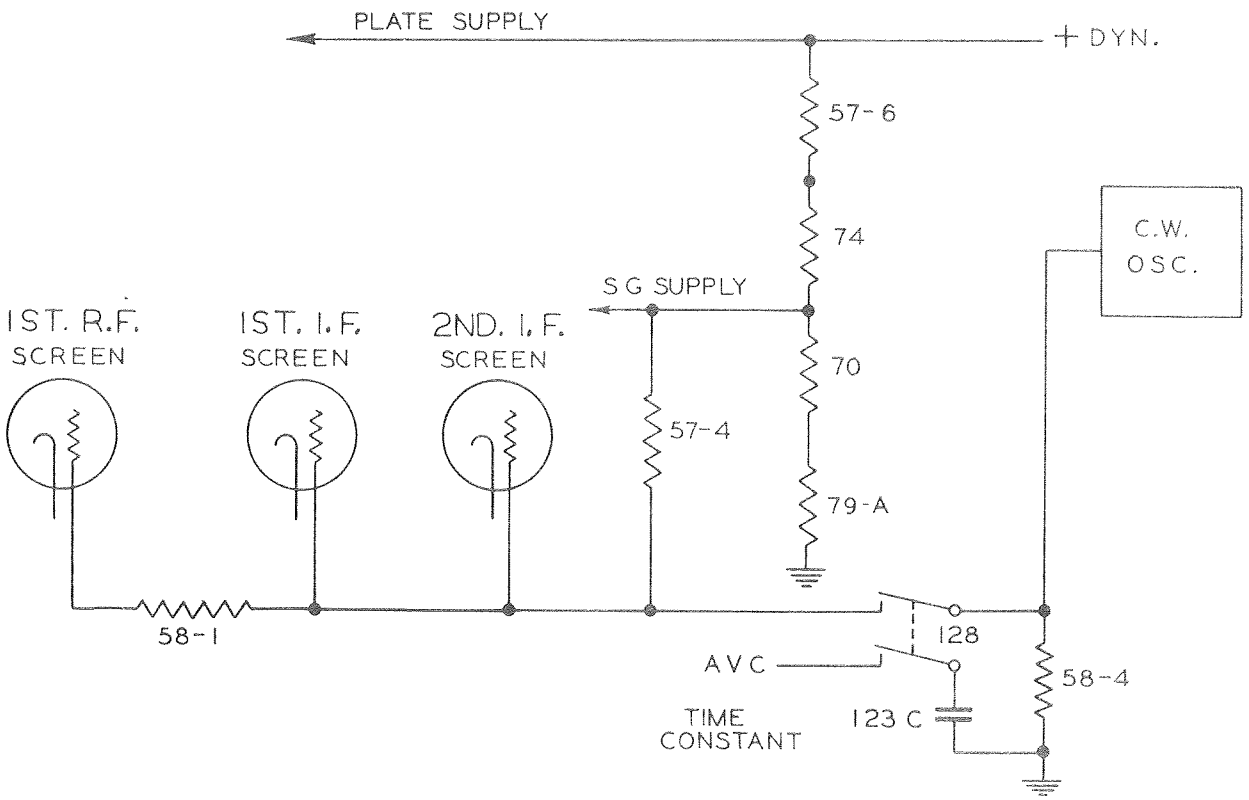

Figure 4–2. C-W Oscillator Switching, Simplified Diagram

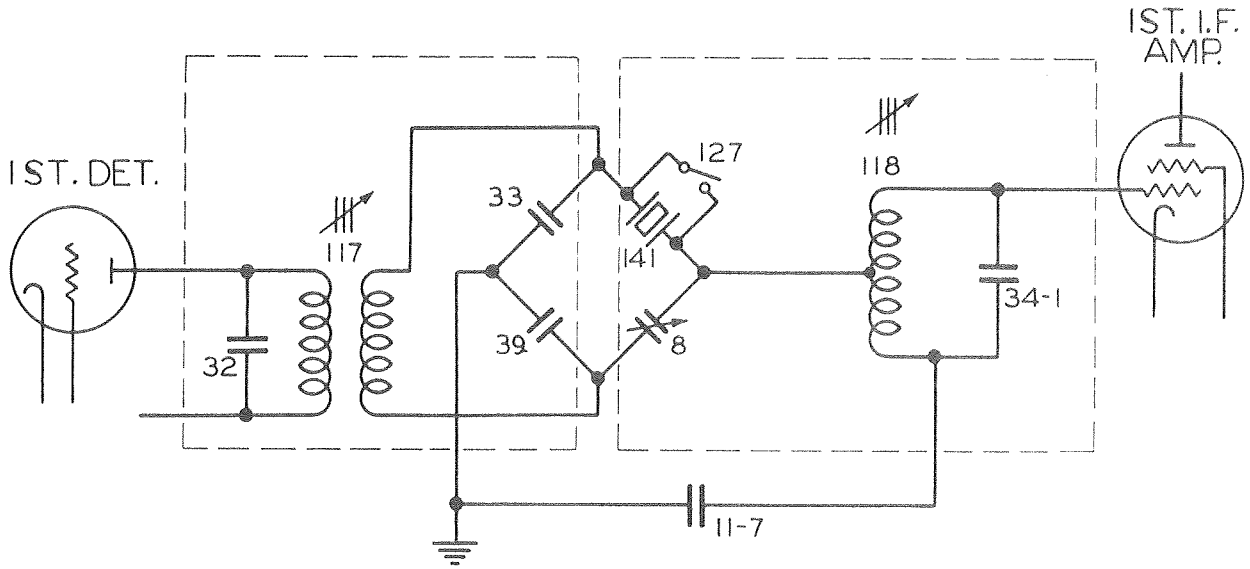

Figure 4–3. Details of Crystal Filter Circuit

secondary core of the first i-f transformer 117. As delivered by the manufacturer, the band width is set at approximately 2,000 cycles.

i. SECOND DETECTOR.—Tube JAN-6B8 also functions as the second detector. A relatively high level signal is supplied by the third i-f amplifier to the diodes of this tube. One diode functions as the signal linear detector, while the other diode is capacity coupled and provides high level, delayed a-v-c control bias.

j. OUTPUT CIRCUIT.

(1) The high level signal diode supplies audio output for driving the output tube, tube JAN-6K6, without additional audio amplifier stages and high level detection results in a number of operating advantages. The high level detection is relatively free from distortion, due to avoiding the characteristic curvature at the lower end of the diode curve. The direct drive of the output tube from the diode detector simplifies the dynamotor ripple filtering and eliminates possible microphonics resulting from high audio amplification. The high diode level further provides relatively high bias voltage, insuring an unusually flat automatic volume control characteristic with the desired time delay. The dual volume control comprises potentiometers 79-A and 79-B. The latter, 79-B, functions only with the switch 129 in the AVC position, permitting the desired adjustment of the audio level to the output tube and load. For manual volume control with switch 129 in the MVC position, the potentiometer 79-A becomes the active control operating on the cathode bias of the r-f and the first and second i-f amplifier tubes. These potentiometers have two linear resistance tapers providing a smooth variation of sensitivity. Automatic load compensation is obtained by the method of biasing the output tube. Here, the grid bias is obtained from the resistance drop across the dynamotor filter reactor; thus, any tendency towards a decreasing load on the dynamotor results in a slight decrease in the bias of the output tube with a compensating increase in the load current. (See Figure 4–4.) Tube JAN-6K6 provides more power than necessary to operate a number of headsets in parallel.

(2) The characteristic increase of internal receiver noise, when tuning from the low to the high frequency end of a band, has been corrected by means of the variable resistor 78. The function of this potentiometer can be more clearly understood by reference to Figure 4–4. Here the noise compensator resistor 78 is mechanically connected to the shaft of the ganged tuning capacitor with an electrical connection to give minimum resistance at the low frequency end of the band. The cathode return lead of the second r-f amplifier tube connects to the noise compensator resistor 78. The gain of this stage is thereby decreased proportionally as the r-f tuned circuit impedance increases (when tuning toward the

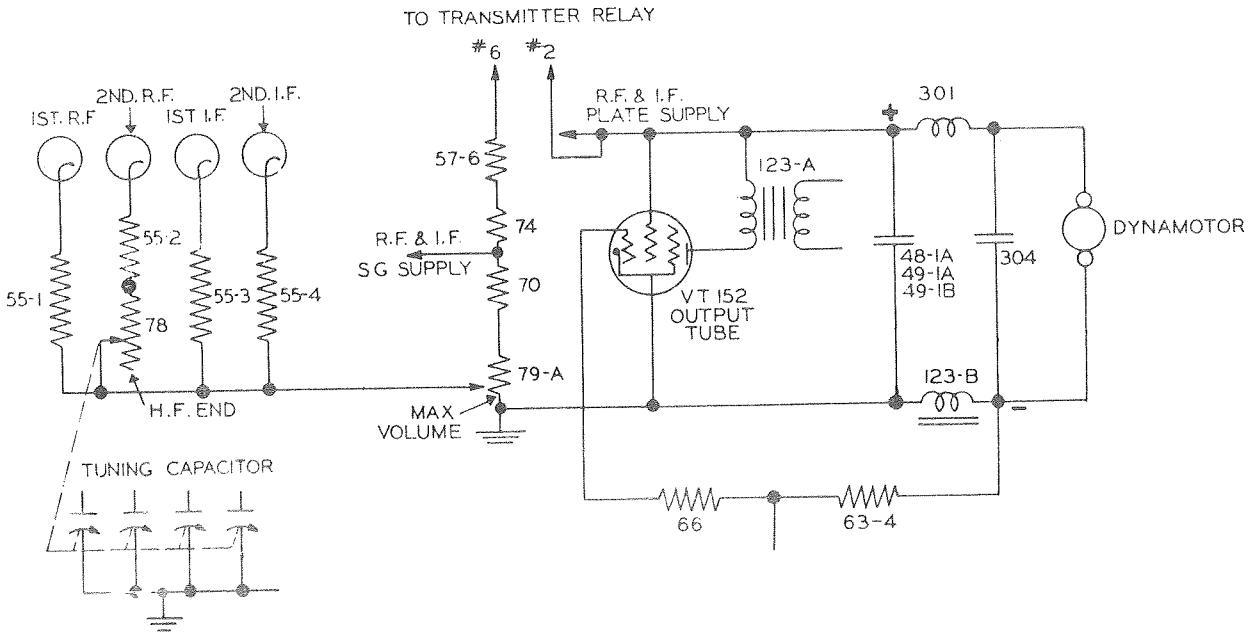

Figure 4–4. Load Compensator and Bleeder Circuit, Simplified Diagram

higher frequency end of the frequency band). This arrangement tends to keep the noise level and receiver sensitivity essentially constant over the tuning ranges.

k. DYNAMOTOR DM-28-(*) OR DM-24-(*).—The dynamotor and associated r-f filter circuits are assembled in one unit. The r-f filters are of the unbalanced type for use with a primary supply in which the negative side is grounded. This dynamotor supplies all of the high voltage direct current required for the operation of the receiver and, in addition, a maximum of 20 milliamperes for use in operating accessory equipment.

SECTION V
MAINTENANCE

1. INSPECTION.

DELETED

DELETED

2. TROUBLE LOCATION AND REMEDY.

a. GENERAL.

(1) The normal sensitivity (number of microvolts input to produce 10 milliwatts output in a 4,000 ohm resistance load) of the receiver is 9 microvolts or less when measured under the following conditions:

(2) AVC-OFF-MVC switch at MVC; 28-volts input for Radio Receiver BC-348-(*) or 14 volts input for Radio Receiver BC-224-(*); c-w oscillator ON; crystal filter OUT; output load 4,000 ohms non-inductive resistance if the output transformer is connected for HI impedance, or 300 ohms non-inductive resistance if the transformer is connected for LO output impedance; pure c-w input from signal generator applied between antenna-ground terminals through a 100 mmf dummy antenna; volume control set to produce 0.3 milliwatt noise output.

(3) This sensitivity will, of course, be subject to variation with time, due to tube aging, etc. Therefore, it is recommended that no attempt be made to retrim or realign the equipment unless the sensitivity is found to be worse than 17 microvolts with new average tubes. The receiving equipment has been carefully adjusted and aligned by the manufacturer before shipment and should maintain these adjustments over reasonably long periods of time. Major adjustments and repairs should be made only in an authorized repair shop equipped with the necessary servicing tools and equipment.

(4) Any changes of the adjustments of the radio frequency circuits should be done by trained personnel only. The difficulties usually experienced are the result of external deteriorating influences, such as wornout vacuum tubes, improper operating voltage, blown fuse, external noises, etc.

Figure 5–1 graphically outlines the procedure for trouble location, the numbers in each block referring to the paragraphs in this section.

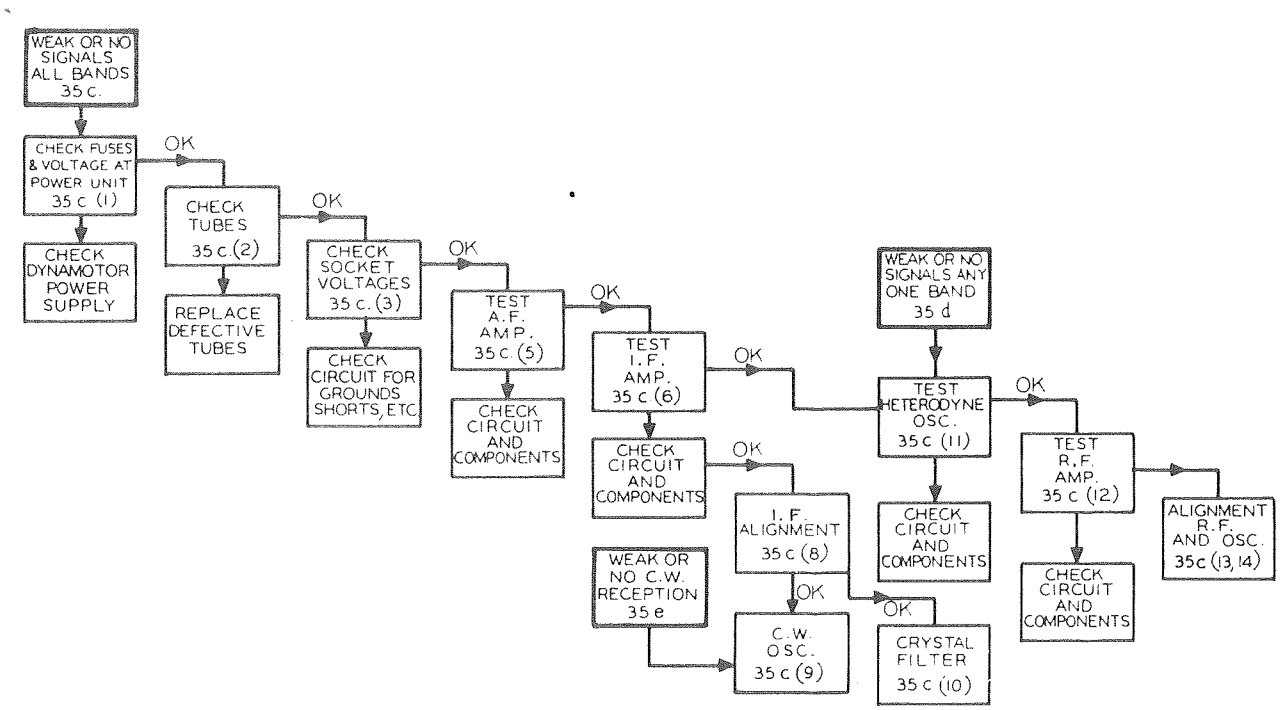

Figure 5–1. Trouble Location and Correction Diagram

b. WEAK OR NO SIGNALS ON ALL BANDS, MODULATED RECEPTION.

(1) CHECK OF DYNAMOTOR VOLTAGES.—When all signals on all bands are weak or no signals are heard even when known to be present, the procedure follows that shown in Figure 5–1. The voltages checked at the dynamotor terminal board should closely approximate the values shown in Figure 5–2. Conditions for measurement are as follows: Input 28-volts for Radio Receiver BC-348-(*) or 14-volts for Radio Receiver BC-224-(*); "CRYSTAL" Switch Set to "OUT"; "AVC-OFF-MVC" Switch Set to "MVC"; "INCREASE VOL." control set to maximum; "C.W. OSC." Switch Set to "OFF." Load 4,000 ohms resistance (output transformer connected for HI output impedance). If these readings do not approximate the values shown, check the fuse as well as the dynamotor and filter circuits, wiring and components.

(2) TUBE CHECK.—If the voltages at the dynamotor terminal board approximate the values given, check all tubes for emission and characteristics or replace all tubes with those of known average characteristics.

Note

All tubes of a given type supplied as spares must be consumed prior to employment of tubes from general stock.

(3) CHECK OF SOCKET VOLTAGES.—If tubes check satisfactorily, or if, after replacing with tubes known to be good, the sensitivity is still low, check all tube socket voltages. The average socket voltages are given in Figure 5–2.

(4) CHECK CIRCUIT WIRING AND COMPONENTS.—If the tube socket voltages do not approximate the values shown in figure 5–2, check the associated circuits and components for grounds, shorts, and similar defects.

(5) TEST OF AUDIO-FREQUENCY AMPLIFIER.—Having checked all socket voltages and found the values to be correct, test the audio frequency amplifier. This can be checked by capacitively-coupling a 400-cycle voltage of approximately 2 volts rms from the detector diode socket prong to ground using a capacitor of 500,000 micromicrofarads. As an alternative, a modulated 915 kc signal of 2 volts may be coupled to this point and ground. Proper functioning of the audio amplifier will be indicated by an output well over 10 milliwatts for the 2 volt audio input or approximately 1 milliwatt output for 915 kc input. Check circuits, wiring and components if this order of response is not obtained.

(6) TEST OF INTERMEDIATE-FREQUENCY AMPLIFIER.—Following a satisfactory test of the audio amplifier, check the intermediate frequency am-

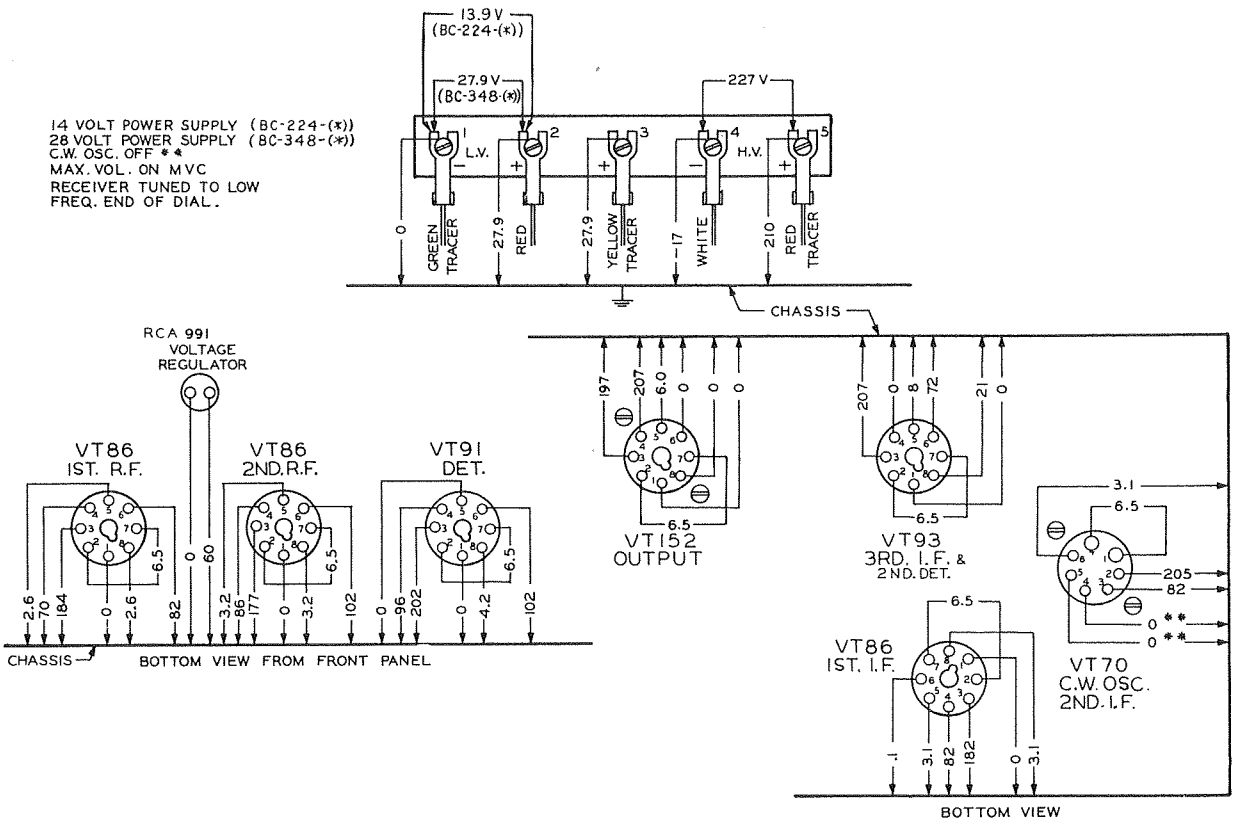

Figure 5–2. Radio Receiver BC-348-(*) or BC-224-(*)—Dynamotor and Tube Socket Voltages

plifier by capacitively coupling the modulated test oscillator to the grid cap of the first detector tube through a 100,000-micromicrofarad capacitor, with the oscillator frequency being adjusted to 915 kc. A rough check of the proper functioning of the i-f amplier is indicated by a comfortable headphone output level with low input from the test oscillator. (Approximately 30 microvolts input for 10 milliwatts output.)

(7) I-F AMPLIFIER CIRCUIT CHECK.—If the i-f amplifier does not respond as above or lacks sensitivity, a progressive check, stage by stage, should be made. The test oscillator, 915 kc (modulated 30% with 400 cycles), is connected through a 100,000 micromicrofarad capacitor to the second detector diode socket prong. A signal response indicates proper functioning. Coupling the test oscillator to the grid of the third i-f should indicate a decided gain in sensitivity. Proceeding similarly towards the first detector, each stage should show a decided gain. Circuit check a faulty stage for grounds, shorts, or defective components.

(8) CHECK AND ADJUSTMENT OF C-W OSCILLATOR.—Check and adjust the c-w oscillator by coupling the 915 kc input (modulation off) to the grid of the first detector tube and switch the c-w oscillator ON. With the beat frequency control set at mid-position, the oscillator inductance tuning core 121 is adjusted for zero beat. If no c-w beat can be heard, check the c-w oscillator circuit for grounds, shorts, or defective components. With the c-w oscillator ON the screen voltage at the first and second i-f sockets drops to approximately 45 volts (measured to ground).

(9) TEST AND ADJUSTMENT OF CRYSTAL BAND-PASS FILTER.—Normally the crystal band-pass filter is adjusted at the factory for a band width of 1,500 to 2,000 cycles at 10X down from resonance. Test this filter by applying an unmodulated signal of approximately 915 kc connected through a 0.1 mfd capacitor to the grid of the first detector tube. The c-w oscillator should be off during this test. To adjust the band width of the crystal filter, a signal generator or microvolter having an expanded tuning

scale in the vicinity of 915 kc and having also an attenuator with a multiplier of 10 times (20db) is required. The following procedure is recommended: Connect a microammeter with a range of approximately 200 microamperes in series with the cathode return of the AVC volume control (79-B white lead). Throw the crystal switch to the IN position. With the unmodulated 915 kc input from the test oscillator, find the resonance peak of the crystal by slightly retuning the test oscillator until maximum deflection is indicated on the microammeter. Adjust the phasing control 8 until the resonance curve as indicated on the microammeter is symmetrical and free from dips or peaks except for the main resonance peak of the crystal. Adjust the band width with an input voltage ratio of 10X to approximately 2 kc by slight realignment of the secondary (top) tuning core of the first i-f transformer 251. After concluding the above described tests, remove the microammeter and restore the circuit to normal.

(10) CHECK OF HETERODYNE OSCILLATOR.—After checking the functioning of the i-f and audio amplifiers, if signals are still not heard on any band, check the heterodyne oscillator. This can be done by observing the cathode voltages at the socket of the first detector tube, Tube JAN 6J7, when grounding the stator of the oscillator section (1-D) of the tuning capacitor. If no change in voltage is noted with this test, check the oscillator circuit for grounds, shorts or defective components.

(11) TEST OF THE R-F AMPLIFIER.—Having completed the test and alignment of the audio amplifier, i-f amplifier and heterodyne oscillator, test the r-f amplifier as follows:

With the band switch set on the band lacking sensitivity capacitively couple a modulated signal from the test oscillator through a 100 micromicrofarads dummy antenna to the antenna post. Set this input signal frequency accurately to the alignment frequency shown in table 5–5 for the band under test. With the tuning control set for the approximate alignment frequency, tune slowly around this point until the maximum response with the least signal input is obtained. Capacitively coupling the test oscillator to the grid of the first r-f and then to the second r-f tubes should show a progressive decrease in output. This indicates the proper functioning of the preceding r-f stage or circuits. If a decrease in response is noted when the signal input is capacitively coupled progressively from the grid of the first detector to the second and first r-f grid caps and finally to the antenna post (with the 100 micromicrofarad dummy antenna capacitor), check the stage which indicates a decrease in response for circuit, ground, shorts, or defective components.

c. WEAK OR NO SIGNALS ON ANY ONE BAND, MODULATED RECEPTION.—The condition of satisfactory reception on several bands and weak or no signals on one or more bands, indicates correct functioning of the i-f and a-f amplifiers and requires checking only the r-f amplifier and heterodyne oscillator for the defective band or bands. The procedure outlined in paragraphs 2*b*(10) and (11) should be followed for the defective band or bands.

d. WEAK OR NO SIGNALS ON ALL BANDS, C-W RECEPTION (MODULATED RECEPTION NORMAL).—Weak or no signals on all bands for c-w reception with satisfactory modulated signal reception requires testing and alignment of the c-w oscillator. Proceed as outlined in paragraphs 2*b*(7) and (8).

e. NOISY OPERATION.—If during tuning, the receiver appears to be erratic or noisy, clean the rotor plates of the gang tuning capacitor with pipe cleaners or compressed air.

CAUTION

Do not apply excessive air pressure when using air to clean the tuning capacitors. A strong blast of air will change the tracking of the capacitor.

3. VOLTAGE AND RESISTANCE MEASUREMENTS.

a. Voltage measurements to ground are given in the following table. Make the following settings and adjustments before measuring voltages:

(1) Set "AVC-OFF-MVC" switch to "MVC."

(2) Set the "INCREASE VOLUME" control to the maximum position (fully clockwise).

(3) Set tuning control to 200 kc.

TABLE 5–1. VOLTAGE TO GROUND, C-W OSCILLATOR OFF

Stage	*Tube*	*Plate Volts*	*Screen Volts*	*Cathode Volts*	*Heater Volts*	*M. A. Plate Current*	*M. A. Screen Current*
1 R-F	JAN 6K7	184	70	2.6	6.3	4.1	1.0
2 R-F	JAN 6K7	177	86	3.2	6.3	4.8	1.3
1 Det.	JAN 6J7	202	96	4.2	6.3	0.23	0.08
Osc.	JAN 6C5	58		0.0	6.3	1.6	
1 I-F	JAN 6K7	182	82	3.1	6.5	4.7	1.2
2 I-F	JAN 6F7	207	82	3.1	6.5	4.5	1.4
3 I-F	JAN 6B8	207	72	21.0	6.5	2.5	0.6
Output	JAN 6K6	197	207	0.0	6.5	18.0	3.2
2 Det.	JAN 6B8 (Diode)	8.0					

TABLE 5–2. VOLTAGE TO GROUND, C-W OSCILLATOR ON

Stage	*Tube*	*Plate Volts*	*Screen Volts*	*Cathode Volts*	*Heater Volts*	*M. A. Plate Current*	*M. A. Screen Current*
1 R-F	VT-86 JAN 6K7	197	37	1.3	6.3	2.0	0.55
2 R-F	VT-86 JAN 6K7	188	65	2.3	6.3	3.7	1.0
1 Det.	VT-91 JAN 6J7	204	72	3.4	6.3	0.17	0.06
Osc.	VT-65 JAN 6C5	58		0.0	6.3	1.6	
1 I-F	VT-86 JAN 6K7	195	44	1.6	6.5	2.3	0.5
2 I-F	VT-70 JAN 6F7	210	44	1.6	6.5	2.2	0.5
3 I-F	VT-93 JAN 6B8	210	72	210	6.5	2.5	0.6
Output	VT-152 JAN 6K6	198	210	0.0	6.5	23.5	3.6
C-W Osc.	JAN-6F7 (Triode)	18.0					

Note

The readings given above are average values taken on receivers of this type using a 14-volt power supply or 28-volt power supply, depending on receiver use. Meter indications within ±10% of these values will in most cases indicate correct operations. The readings are taken with the tuning control set to the I-F end of the dial.

b. Resistance measurement to ground are given in the following table. Make the following settings and adjustments before measuring resistance:

(1) Disconnect the power plug at the rear of the receiver cabinet.

(2) Set "AVC-OFF-MVC" Switch to "MVC" unless otherwise indicated in the tables below.

TABLE 5–3. RESISTANCE TO GROUND (OHMS), C-W OSCILLATOR OFF

					"AVC-OFF-MVC" SWITCH SETTING	
					"MVC"	"AVC"
Stage	*Tube*	*Cathode*	*Plate*	*Screen*	*Grid*	*Grid*
1 R-F	JAN 6K7	490	5,200	80,000	100,000	1.8 meg.
2 R-F	JAN 6K7	480	5,200	75,000	100,000	1.8 meg.
1 Det.	JAN 6J7	15,000	5,600	75,000	0	0
Osc.	JAN 6C5	0	41,000	.....	100,000	100,000
1 I-F	JAN 6K7	520	5,600	70,000	500,000	1.8 meg.
2 I-F	JAN 6F7	470	500	70,000	500,000	2.25 meg.
3 I-F	JAN 6B8	6,200	500	180,000	5,000	5,000
Output	JAN 6K6	0	1,080	480	700,000	

TABLE 5–4. RESISTANCE TO GROUND (OHMS), C-W OSCILLATOR ON

					"AVC-OFF-MVC" SWITCH SETTING	
					"MVC"	"AVC"
Stage	*Tube*	*Cathode*	*Plate*	*Screen*	*Grid*	*Grid*
1 R-F	JAN 6K7	490	5,200	20,000	100,000	1.8 meg.
2 R-F	JAN 6K7	480	5,200	23,000	100,000	1.8 meg.
1 Det.	JAN 6J7	15,000	5,600	23,000	0	0
Osc.	JAN 6C5	0	41,000	.....	100,000	100,000
1 I-F	JAN 6K7	520	5,600	9,200	500,000	1.8 meg.
2 I-F	JAN 6F7	470	500	9,200	500,000	2.25 meg.
3 I-F	JAN 6B8	6,200	500	180,000	5,000	5,000
Output	JAN 6K6	0	1,080	480	700,000	....
C-W Osc.	JAN 6F7	...	82,000	.....	500,000	....
Det. Diode	JAN 6B8	...	180,000	.....	.....	....
AVC Diode	JAN 6B8	...	380,000	.....	.....	....

Note

The readings tabulated above are average values taken on receivers of this type with the storage battery disconnected. Meter indications within plus or minus 10% of the values will in most cases indicate correct operation.

4. ALIGNMENT.

a. ALIGNMENT OF I-F AMPLIFIER.—When all stages have been tested, the i-f amplifier alignment is checked by capacitively coupling a low level input signal of 915 kc to the first detector grid and adjusting the i-f tuning cores of both primary and secondary windings of the first, second and third i-f transformers and the tuned circuit of the crystal filter assembly for maximum output. The fourth i-f transformer is slightly over-coupled with the resultant double response peaks symmetrically located approximately 5 kilocycles each side of the 915 kc i-f alignment fre-

quency. In general, it will not be necessary to realign this transformer because of its broad characteristic. However, if realignment becomes necessary, the following procedure should be followed.

Connect the modulated test oscillator through a 100,000 micromicrofarads capacitor to the grid of tube JAN 6B8 (third i-f amplifier tube) and to ground. Set the input frequency at 910 kc and adjust alternately first the primary tuning core, then the secondary tuning core of the fourth i-f transformer until maximum output is obtained when both cores are turned in a right-hand screw direction. The modulated test oscillator should then be turned slowly through the 915 kc setting and to approximately 920 kc where a second response peak of approximately equal amplitude as that at 910 kc should be obtained. This indicates correct alignment. Slight supplementary adjustments of the primary and secondary tuning cores may be necessary to secure a symmetrical double peak response with the slight hollow between response peaks located at the 915 kc alignment frequency. If a sweep frequency-modulated test oscillator is available, this fourth i-f transformer can be conveniently aligned by visual observation on a cathode-ray oscilloscope. In this case, the tuning core adjustments are made to obtain a double-peak response pattern centered at 915 kc.

b. ALIGNMENT OF R-F AMPLIFIER.

Note

For a general alignment start with the 200-500 kc band No. 1.

TABLE 5–5. ALIGNMENT DATA

Band No.	*Freq. Range*	*Alignment Frequency*	*Trimmers**			
			Osc.	*Det.*	*R-F*	*Ant.*
1	200-500 kc	500 kc 200 kc	6-1 10	3-5	3-3	2**
2	1.5- 3.5 mc	3.5 mc	6-2	5-5	5-3	5-1
3	3.5- 6.0 mc	6.0 mc	6-3	3-6	3-4	3-1
4	6.0- 9.5 mc	9.5 mc	6-4	5-6	5-4	5-2
5	9.5-13.5 mc	13.5 mc	3-7	7-2	7-1	3-2
6	13.5-18.0 mc	18.0 mc	3-8	4-3	4-2	4-1

* Refer to figures 6–1, 6–3, 6–4, 6–5, 6–6, 6–9, and 6–10 for location. The alignment controls for the various bands are numbered on the chassis adjacent to the control. Controls for band 1 are marked 1, those for 2 marked 2, etc.

** Antenna alignment control. In the r-f alignment for any particular band adjust the tuning control for the alignment frequency (see Table 5–5) and couple the modulated test signal at this alignment frequency from the test oscillator to antenna post through the 100 mmf dummy antenna. Adjust the three r-f trimmers (Ant.; R-F; and Det.) for this band, for maximum output. A similar procedure is followed in the alignment of each band.

c. ALIGNMENT OF HETERODYNE OSCILLATOR.

Note

For a general alignment start with the 200-500 kc band No. 1.

The alignment of the heterodyne oscillator is necessary only when the tuning dial frequency calibration is in error by more than 0.5 per cent. To align the oscillator follow the same general procedure described for the alignment of the r-f amplifier. With the BAND SWITCH on band No. 1 (200-500 kc) and the TUNING control set to the alignment frequency, couple the output of the modulated test oscillator (set at the alignment frequency) to the antenna post through the 100 micromicrofarad dummy antenna. Adjust the oscillator trimmer for this band for maximum audio output. Note that in band No. 1 there are two such adjustments, one at the i-f and the other at the h-f end of the dial. A similar procedure is followed in the alignment of each band.

5. SPECIAL MAINTENANCE PROCEDURES.

a. CARE AND SERVICING OF DYNAMOTOR DM-28-(*) or DM-24-(*).

(1) The dynamotor and filter assembly is removable from the receiver chassis without disturbing other parts, provided the procedure outlined below is followed.

(2) Loosen the two thumbscrews on the receiver panel, and draw the chassis from the cabinet. Lay the chassis with top upwards on a smooth, flat surface, with the rear toward the operator. Loosen the five connector screws on the dynamotor terminal strip and withdraw the spade terminals beneath them.

(3) Loosen the four captive screws 211, Figure 5—3; which hold the dynamotor unit to the chassis. Remove the dynamotor and filter assembly from the receiver by grasping the dynamotor and lifting vertically.

(4) The filter portion of the dynamotor unit is made accessible by the removal of the filter unit cover located at the base of the dynamotor. (See fig. 5—3.)

(5) Lubricate the dynamotor at 1,000 hours or approximately six months of ordinary service. For ordinary and LOW temperature conditions use a mineral oil grease AN-G-15. For unusually high temperatures which are present in tropical climates use AN-G-5 grease. The directions for lubrication are stamped on the inside of the end-bell dust covers. Access to the bearings of the dynamotor is obtained by removing the dust covers after first cutting the safety wires and removing the retaining screws, then unscrewing the bearing end plates. Do not PACK the lubricant in these bearings.

(6) When necessary to replace the ball bearings or turn down the commutators, first remove the brushes from their cartridges. (See fig. 5-4.) Remove the nuts from the tie rods which hold the bearing end-bells, and pull the end-bells away from the

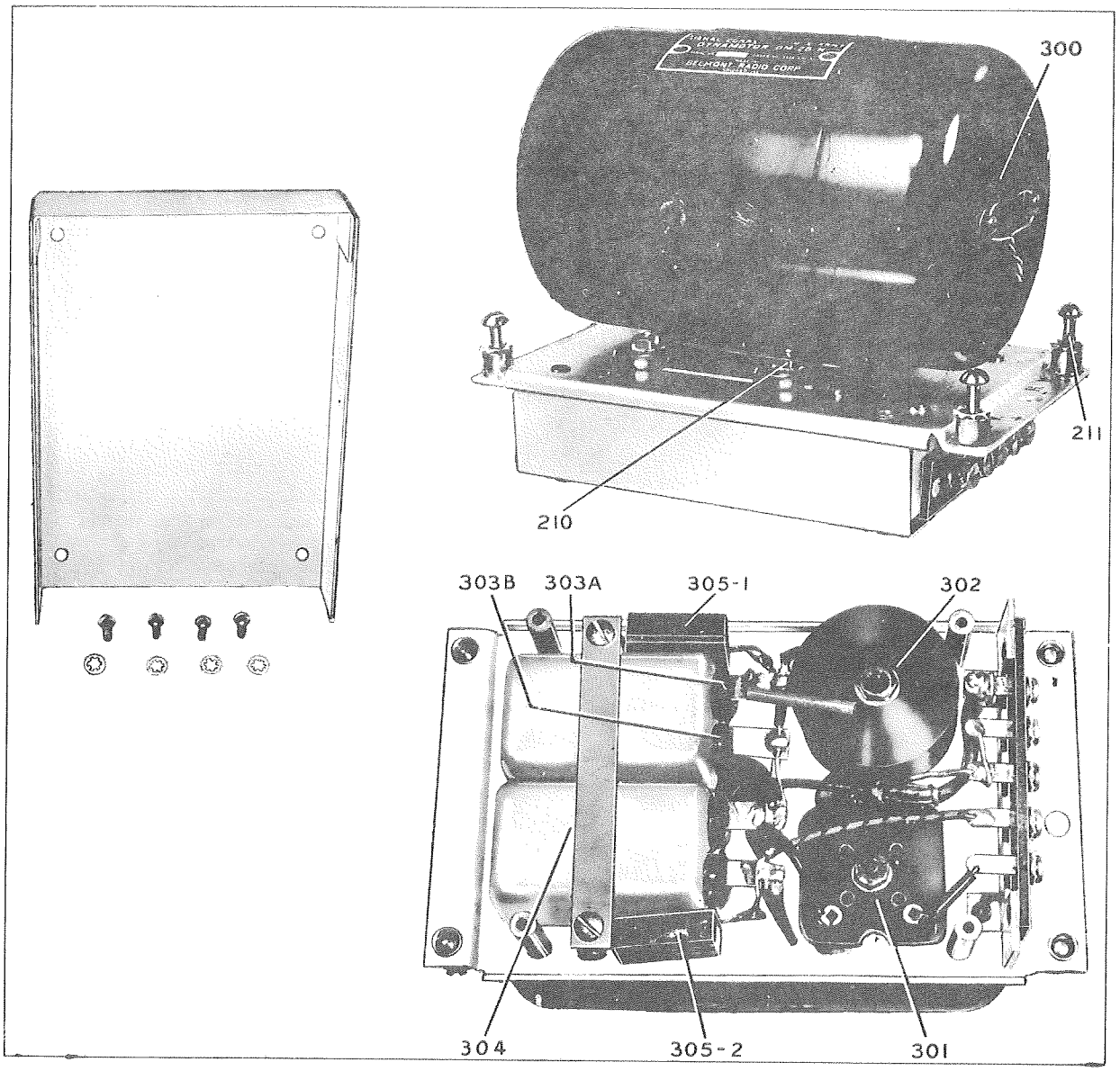

Figure 5–3. Dynamotor DM-28-(*) or DM-24-(*) and View Showing Filter Open

field coil assembly. The armature can now be taken out. Examine the brushes to see that they have worn properly and are free from hard spots. Should such spots be apparent (they generally cause grooves in the commutator surface), replace the brush and smooth the commutator. The ball bearing retainers and the shaft are machined for very snug fits, but a slight tapping will loosen them. To remove the bearing retainers from the end-bells, use two small screwdrivers as wedges between the outer ball race and the end-bell. If the grease slinger becomes bent during removal, straighten it and replace it on the shaft before replacing the bearing.

(7) To smooth down the commutator, rotate it in a lathe holding a fine grade of sandpaper (not coarser than size 00), lightly against the commutator surface. Do not use emery cloth. Wipe away all residue of dust, sand and dirt to leave a clean, smooth, polished commutator surface. Never sand a commutator having a smooth or polished surface or turn it down simply because it is discolored. If the commutator is turned down in a lathe, the mica segment separators must be undercut.

(8) Re-assemble the dynamotor in the reverse process of the disassembly procedure. The use of the screwdrivers as wedges is not necessary. In replacing the brushes, check to see that the + and – markings on the brushes correspond with those on the brush holder supports, and that the marked side of the brush is towards the top of the dynamotor. The commutator must be given a final inspection for free running, cleanliness and absence of grease or oil. Wipe the end-bells clean and dry them before replacing on the dynamotor.

(9) The nominal ratings of Dynamotors DM-24-(*) are: Input, 2.45 amperes at 13.8 volts; output, 70 milliamperes, at 220 volts; regulation 12 per cent. The nominal ratings of Dynamotors DM-28-(*) are Input, 1.23 amperes at 27.9 volts; output, 70 milliamperes at 220 volts; regulation, 12 per cent.

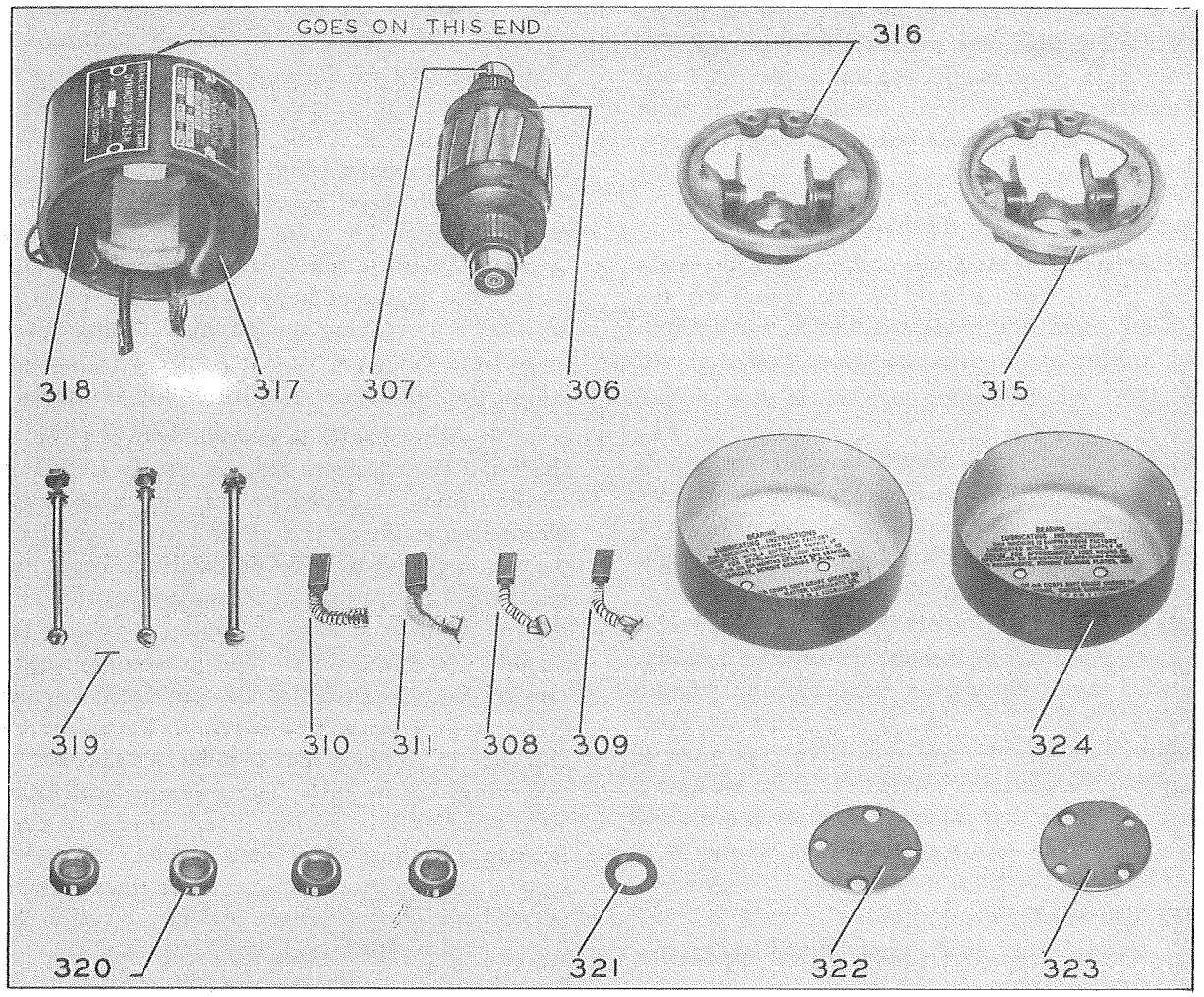

Figure 5–4. Dynamotor DM-28-(*) or DM-24-(*)—Disassembled

b. REMOVAL OF FRONT PANEL.

(See figure 8–14.)

(1) For adjustment of dial or mask, or for servicing certain parts, it may be necessary to remove the panel. Take the chassis, with panel attached, completely out of the cabinet. Place it with the panel facing upwards. Unsolder the lead to the antenna binding post and the lead from the chassis to the dial lights. Remove the dial light housing cover, the two thumbscrew rods, the handles, and all knobs and retaining nuts of all controls except the DIAL LIGHTS control. Remove the retaining nuts of the TEL jacks. The panel may be lifted off after the removal of the end plate holding screws, the chassis holding screws, and the dial casting holding screws.

(2) In replacing the BEAT FREQ. control knob, turn the flexible shaft until the set screw in the coupling at the internal end, points away from the panel. Now mount the knob so that the arrow points vertically towards the top of the receiver. This knob has two set screws. In replacing the other knobs on the shafts, note that flats on the shafts provide for proper location. Tighten all set screws securely, and give a second tightening to the set screw on the band switch knob after the shaft has been rotated a few times.

c. DIAL AND MASK ASSEMBLY.

(1) Attached to the front panel, and to the main frame or chassis casting used as the frame for the switch drive shaft, dial mask and detent, for the tuning dial, tuning shaft, reduction gears, and stop. All of these parts are assembled, and can be moved as a unit.

(2) The switch drive shaft passes through a hole in an adjustable plate, located in the dial lamp housing, and through a clearance hole in the panel. The hole in the adjustable plate is purposely given a larger clearance than bearing requirements would dictate. The bearing is used to support the shaft against forces which might spring it or damage the internal bearing. The shaft extends through a long bushing pressed in the dial housing. At the inside end of the shaft the detent (star wheel) and the driving portion of the coupling member are pinned in place by means of taper pins. The dial assembly runs on the outside surface of the long bushing referred to above. Just inside the panel, the hub of the mask is attached to the shaft by a taper pin.

(3) A stop arm, on the back of the dial frame casting, engages a pin in the detent and limits its rotation to 6 positions spaced 60 degrees apart. Attached to the casting is the assembly, consisting of pivot pins, arms with rollers, and spring which positions the detent. This assembly is locked with two dowel pins after the correct location is made.

(4) On the front (panel) end of the bushing (through which the switch shaft passes) there is a narrow shoulder which supports the lower end of the dial index plate. This index plate is attached to the casting at its upper end with means for removing any slack and keeping it straight and taut. The inner end of the mask hub and the outer end of the dial hub turn and are held against opposite sides of the index plate.

(5) The dial is attached to a flanged hub which runs on the outside surface of the bushing through which the switch drive shaft passes. This hub also carries a large gear driven by a pinion combined with a split idler gear. This split idler gear and pinion has adjustment in the clearance holes for the mounting screws to enable the backlash to be reduced to the smallest practicable amount between the pinion and the large dial gear.

(6) The tuning shaft has, in addition to the pinion referred to above, a stop, and a worm which meshes with a split worm gear on a cross shaft at the back of the frame. Both this cross shaft and the tuning shaft run in bearings which are integral in the casting. Both shafts have spring thrust washers to remove end play. The cross shaft carries a pinion which is meshed with a split gear on the tuning capacitor shaft. The degree of mesh of this pinion and gear is adjustable by moving the tuning capacitor toward or away from the panel after it is placed in position and before the holding screws are finally tightened.

(7) The overall gear ratio between the tuning shaft and the capacitor shaft is 200 to 1. The design of the tuning capacitor permits but a small amount of rotation at either end of its travel beyond the 180 degrees required to give its complete range in electrical capacity. However, means are provided to stop the tuning shaft at either end after a total of approximately 100 revolutions. This is accomplished by a cam on the outer edge of the tuning dial which operates an arm pivoted on a pin on the frame casting. One end of this arm has a roller which runs on the outer edge of the dial. The roller is held in contact with the dial by a spring. The dial edge is cut away in such a manner that when the end of the tuning scale is reached, the roller can move toward the center of the dial, being forced in that direction by the spring. Thus the opposite end of the stop arm is moved so that the hook at the end of the arm engages the rotating stop on the tuning shaft, and thereby prevents further rotation. When the direction of ro-

tation of the tuning shaft is reversed, the roller and arm are pushed outward against the spring by the cam edge of the dial and the stop disengages.

(8) Since a definite relation must be set and maintained between the dial position and the angular position of the rotor of the tuning capacitor, adjustment is provided at the pinion on the cross shaft at the rear of the frame. (This is the shaft which also carries the worm gear.) This pinion is held in place by two set screws which bear in a groove on the shaft. By loosening these two set screws, either the dial or the tuning capacitor can be rotated while the other part remains fixed. The correct relation between these is that the tuning capacitor rotor plates are fully meshed with the stator plates (maximum capacity) when the dial is set with the isolated index mark at the low frequency end of the 13.5 to 18.0 mc band.

d. REMOVAL AND REPLACEMENT OF DIAL MECHANISM.

(1) To remove the dial mechanism from the chassis for servicing, first remove the front panel in accordance with instructions given in paragraph 5*b*. The frame of the mechanism is attached to the chassis by the bracket holding the fuse, and by two slotted hexagon head screws through the flange on the under side of the chassis. One of these screws is beneath the removable shield which covers the terminal of the first i-f transformer. When these screws are removed, the complete unit can be removed. The center disc of the flexible coupling is loose and will drop out of engagement.

(2) To remove the index and dial, remove the taper pin holding the mask hub to the switch drive shaft. Support the shaft when driving out this pin, so that excess stress will not be placed on the center bushing. After the removal of the mask and the index, the dial and its gear are free to slide off the bushing. In replacing these parts, the thrust washer behind the dial hub must be turned in the position to give maximum thrust, which is convex side outward.

(3) If the dial is removed and replaced, it is possible that in meshing the dial gear with the idler gear the stop relationship may not be correct. In this case it may be necessary to change a tooth at a time to correct the relationship. The stop relationship must be such that the roller arm hook and the tuning shaft stop arm engage fully at the end of the last revolution. However, on the previous revolution the arm must not start to move until the rotating arm has passed under the roller arm hook. This adjustment can only be made by trial and inspection, but it can be secured in one or two trials. Substitution of a different stop arm may also require readjustment. In this case the adjustment should be made by lengthening or shortening the roller end of the arm. This is done by loosening the two nuts on the arm, and adjusting the arm by means of the slotted holes provided.

(4) When the dial mechanism is replaced, the flexible coupling must be properly positioned so that the position of the mask corresponds to the switch position, since it is possible otherwise to get the band switches to an operative position. The correct relative positions are obtained when the mask is set to band 1 and the set screw, locking the flat switch to the large level gear hub, is vertical.

(5) If any of the gear trains including split gears have been unmeshed in disassembly, the split gears must be reset to put tension on the loose section when they are again meshed. Normally, a displacement of one tooth between the two sections is sufficient. Trial will show whether this will remove the backlash.

(6) When the dial mechanism is re-assembled to the chassis, carefully adjust the relation between the dial and the tuning capacitor in order to maintain the calibration and prevent over-running the capacitor (refer to paragraph 3 lh). This is done by loosening the two set screws in the pinion on the cross shaft on the back of the dial assembly. Before putting the mechanism in place, this pinion can be moved along the shaft toward the worm gear to clear the capacitor split gear. This facilitates assembly, since the gears can be meshed after the dial mechanism is bolted in place, making it easier to get the tension on the split gear in the capacitor assembly.

e. REMOVAL OF ANTENNA, R-F, DETECTOR, AND OSCILLATOR UNITS.—In many cases servicing of these units will require only the removal of the top or bottom cover of a particular unit; however, any unit may be removed and replaced independently as follows:

(1) Unsolder the lead to the main tuning capacitor at the capacitor by first removing the capacitor shield. Unsolder all other leads at the unit.

(2) Disconnect the band switch drive shaft and withdraw same from the antenna unit end.

(3) In case of antenna unit, disconnect the antenna alignment control shaft.

(4) Remove screws holding unit to the tie strips at the bottom.

(5) Remove screws holding the unit to the chassis.

(6) Lift the unit from the receiver, taking care that it comes out freely.

(7) When replacing a unit, reverse the above procedure. Do not screw the chassis holding screws tightly until the drive shaft has been replaced and the band change switch knob has been rotated a number of times. This will insure the self-alignment of the unit and the proper action of the detent.

6. REPLACEMENT OF FUSES AND LAMPS.

a. Remove the dial light housing cover by unscrewing the two thumbscrews at each side of the dial. The lamps are accessible with this panel off.

b. To replace fuse, remove the chassis from the cabinet and turn upside down. The fuse is located on a panel in the center of the bottom side of the chassis.

7. LUBRICATION DATA.

This dynamotor requires lubricating after 1,000 hours or approximately 6 months of ordinary service. Lubricate it with Air Corps Grade 375 grease only. The directions for lubrication are stamped on the inside of the end-bell dust covers. To gain access to the dynamotor bearings, remove the dust covers after cutting the safety wires and removing the retaining screws, then unscrew the bearing end plates. Do not PACK the lubricant in these bearings.

SECTION VI

SUPPLEMENTARY DATA

1. TUBE COMPLEMENT.

TABLE 6–1. TUBE COMPLEMENT

Quantity	*JAN Type*	*VT-type*	*Function*
3	JAN 6K7	VT-86	RF amplifier RF amplifier IF amplifier
1	JAN 6J7	VT-91	1*st* Detector
1	JAN 6F7	VT-70	2*nd* i-f; c.w. oscillator
1	JAN 6B8	VT-93	3*rd* i-f; 2*nd* detector, a.v.c.
1	JAN 6C5	VT-65	Oscillator
1	JAN 6K6	VT-152	Output amplifier
1	JAN 991		Voltage regulator (Neon bulb)

2. LAMP COMPLEMENT.

TABLE 6–2. LAMP COMPLEMENT

Quantity	*Type*	*Rating*
2	LM-27	6.3 volts; 0.25 amperes

3. FUSE COMPLEMENT.

TABLE 6–3. FUSE COMPLEMENT

Quantity	*Type*	*Rating*
1* or 1**	FU-35 FU-23	5 amperes; 25 volts 10 amperes; 25 volts

* Used with Radio Receiver BC-348-(*) only.
** Used with Radio Receiver BC-224-(*) only.

4. FREQUENCY RANGE.

TABLE 6–4. FREQUENCY RANGE

Band	*Frequency Coverage*
1	200- 500 kilocycles
2	1.5- 3.5 megacycles
3	3.5- 6.0 megacycles
4	6.0- 9.5 megacycles
5	9.5-13.5 megacycles
6	13.5-18.0 megacycles

5. PERFORMANCE DATA.

a. SELECTIVITY.—The selectivity of a radio receiver is that characteristic which determines the extent to which it is capable of differentiating between the desired signal and disturbances of other frequencies. This characteristic may be determined as follows:

(1) With Radio Receiver BC-348-(*) or BC-224-(*) and a signal generator, both tuned to 200 kc, adjust the generator output to obtain a receiver output of 10 milliwatts into a 300 ohm resistive load. Use 30 percent modulation, 400 cycles.

(2) Increase the voltage of the signal generator to twice (2X) the value obtained above.

(3) Increase the generator frequency until the receiver output decreases to 10 milliwatts. Record the frequency change.

(4) Without changing the generator output, decrease the generator frequency, passing through 200 kc, until the receiver output is again 10 milliwatts. Record the difference between this frequency and 200 kc.

(5) The sum of the two values obtained in steps 3 and 4 should approximate 2.5 kc, as indicated in the table below. Additional data on the selectivity characteristic of Radio Receiver BC-348-(*) or BC-224-(*) may be obtained by using generator outputs of 10 times (10X), 100 times (100X), 1,000 times (1,000X), etc., the value obtained in step 1 and repeating steps 3, 4 and 5.

(6) Repeat steps 1 through 5 substituting 500 kc in place of 200 kc. Data on Radio Receiver BC-348-(*) or BC-224-(*) is obtained as outlined above, using the proper reference frequencies as given below. (These measurements were made with "CRYSTAL" switch in the "OUT" position and the "AVC-OFF-MVC" switch in the "MVC" position.)

TABLE 6–5. SELECTIVITY DATA

		MCW Selectivity			
Band No.	*Ref. Freq.*	*2X*	*10X*	*100X*	*1,000X*
1	200 kc	2.5 kc	7.0 kc	12.0 kc	15.0 kc
	500 kc	5.0 kc	10.0 kc	15.0 kc	22.0 kc
2	1.5 mc	7.0 kc	15.0 kc	25.0 kc	35.0 kc
3	3.5 mc	7.0 kc	15.0 kc	25.0 kc	35.0 kc
4	6.0 mc	7.0 kc	15.0 kc	25.0 kc	35.0 kc
5	9.5 mc	7.0 kc	15.0 kc	25.0 kc	35.0 kc
6	13.5 mc	7.0 kc	15.0 kc	25.0 kc	35.0 kc

Table 6–5 is presented for use as a guide in servicing receivers. It applies to undamaged and perfectly aligned receivers, under reasonable climatic conditions. These values are to be regarded as average, to be approximated when adjusting the equipment after overhaul or long service. Departures from these values are not necessarily cause for major operations on the equipment. The values should be employed with caution and discretion, particularly in the case of measurements carried out under extreme conditions of temperature or humidity, or with a signal generator whose accuracy is not definitely known.

b. SENSITIVITY.—The r-f input required from a directly connected signal generator to obtain 10 milliwatts output (6.3 volts) with a 300 ohm resistive load is shown for three points in each radio receiver. The load resistance shall be connected to the test receiver only, and the output circuit of this receiver shall be isolated from the headsets and output circuits of other receivers. The frequencies at which the measurements must be made are listed in the table below. Input voltage 14 or 28 volts. Sensitivity values are in microvolts, modulated 30 percent at 400 cps.

TABLE 6–6. SENSITIVITY DATA

Band	*Freq. Range*	*Antenna Binding Post*	*Mixer Control Grid (Top Cap)*	*Audio Grid*
1	200- 500 kc	7 microvolts	35 microvolts	2 volts*
2	1.5- 3.5 mc	5 microvolts	5 microvolts	2 volts
3	3.5- 6.0 mc	5 microvolts	5 microvolts	2 volts
4	6.0- 9.5 mc	5 microvolts	5 microvolts	2 volts
5	9.5-13.5 mc	5 microvolts	5 microvolts	2 volts
6	13.5-18.0 mc	5 microvolts	5 microvolts	2 volts

* Audio input 400 cps.

This table of sensitivities is for use as a guide in servicing the receivers. It applies to undamaged and perfectly aligned receivers under reasonable climatic conditions. Microvolt values shown are to be regarded as average; they are to be approximated when adjusting the equipment after overhaul or long service. De-

partures from these values are not necessarily cause for major operations on the equipment. The values should be employed with caution and discretion, particularly in the case of measurements carried out under extreme conditions of temperature or humidity. A signal generator whose accuracy is not definitely known and a set of vacuum tubes which are not average may produce results varying considerably from those shown in the table.

c. DYNAMOTOR PERFORMANCE DATA.

TABLE 6–7. DYNAMOTOR PERFORMANCE DATA

Average performance data on Dynamotor DM-24-D, DM-24-F, DM-28-O, DM-28-L, DM-28-H and DM-28-R is as follows: (dynamotor and filter disconnected from receiver and negative high voltage connections made to case of unit).

DM-24-(*)				*DM-28-(")*			
Input		*Output*		*Input*		*Output*	
Volts	*Amperes*	*Volts*	*Milliamperes*	*Volts*	*Amperes*	*Volts*	*Milliamperes*
12	1.4	213	0	24	0.7	215	0
12	2.0	210	30	24	1.1	210	30
12	2.5	190	60	24	1.3	202	60
14	1.4	255	0	28	0.8	258	0
14	2.2	236	40	28	1.1	246	40
14	2.8	226	75	28	1.5	236	75

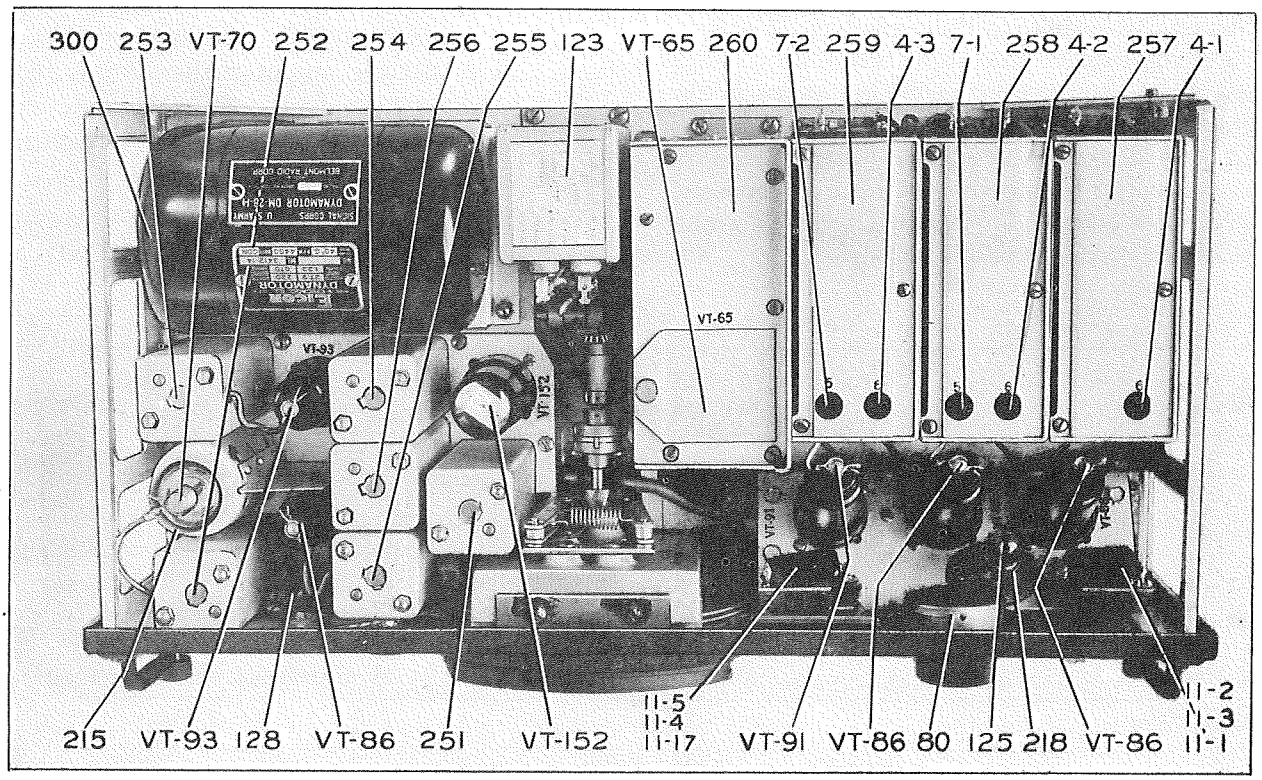

Figure 6–1. Radio Receiver BC-348-(*) or BC-224-(*)—Top View of Chassis

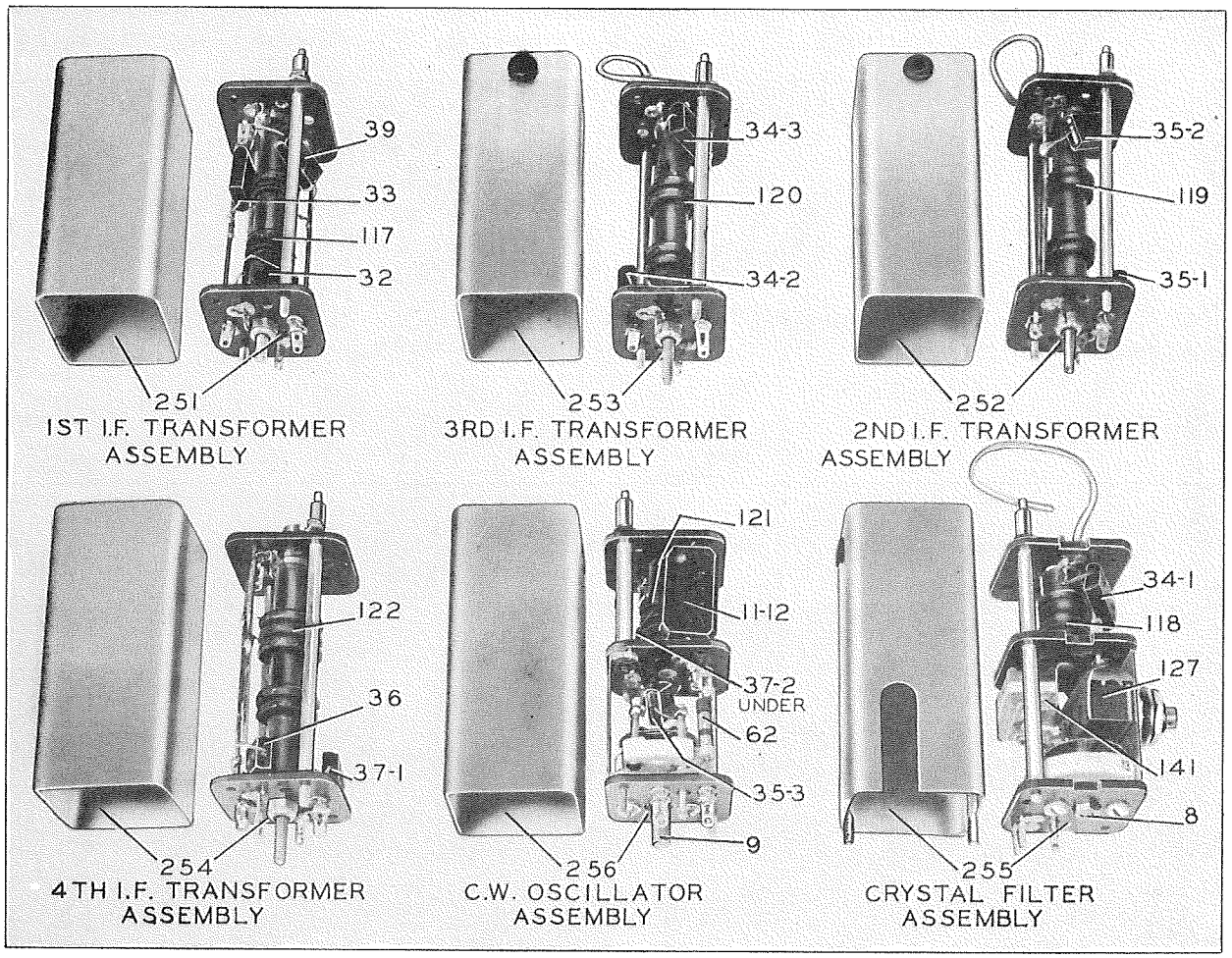

Figure 6–2. I-F Transformers, C-W Oscillator and Crystal Filter Assemblies

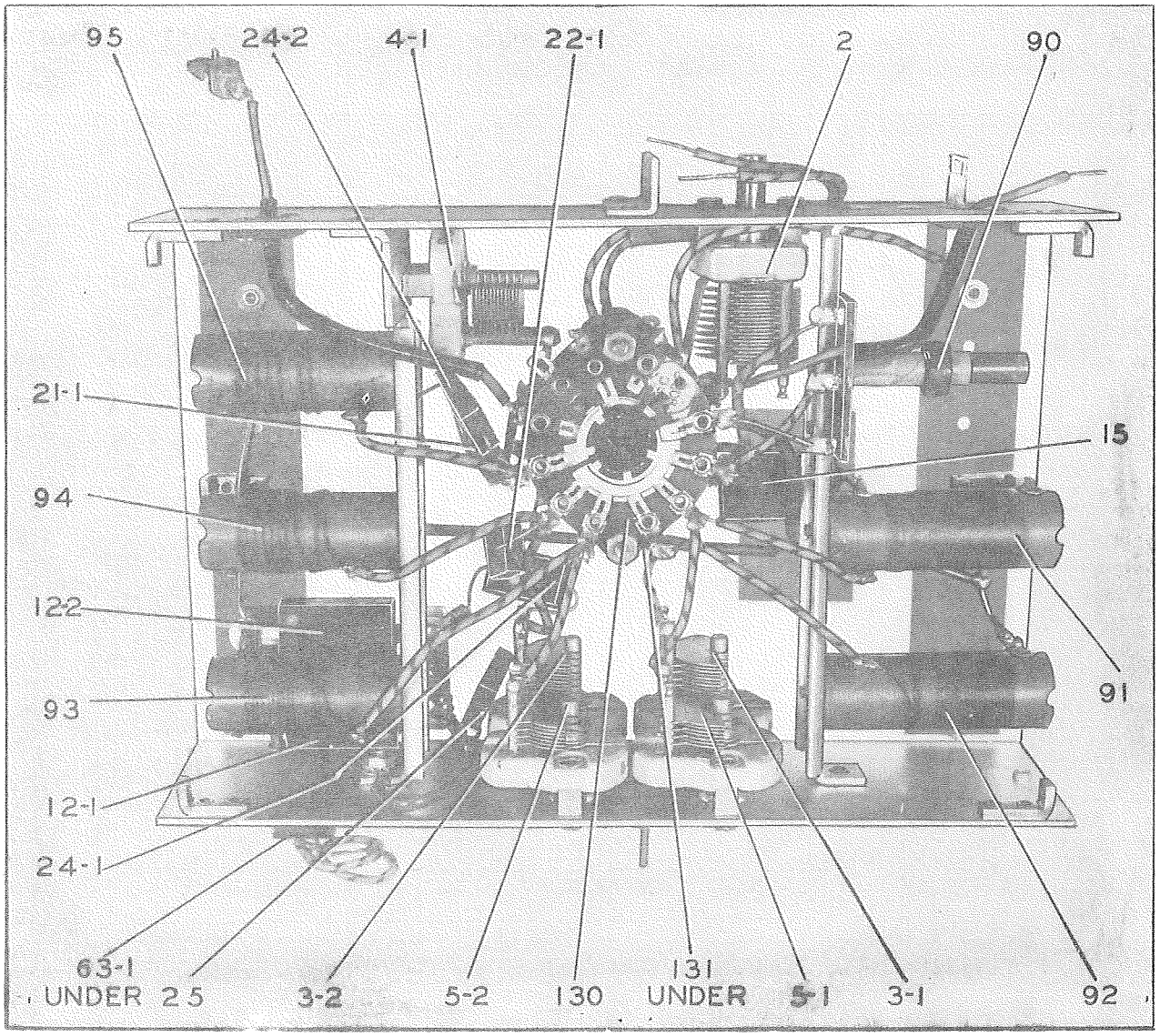

Figure 6–3. Antenna Unit

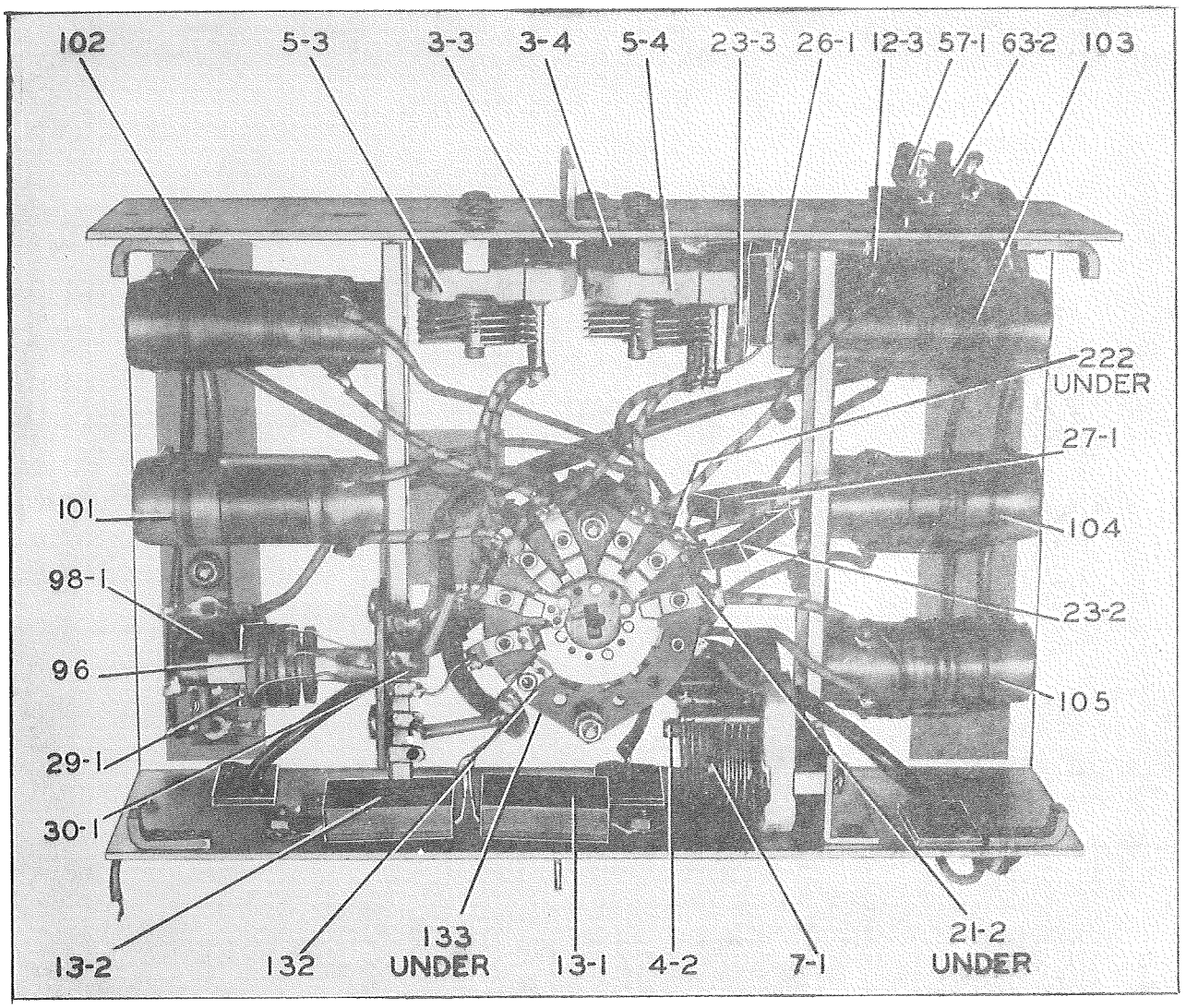

Figure 6–4. R-F Unit

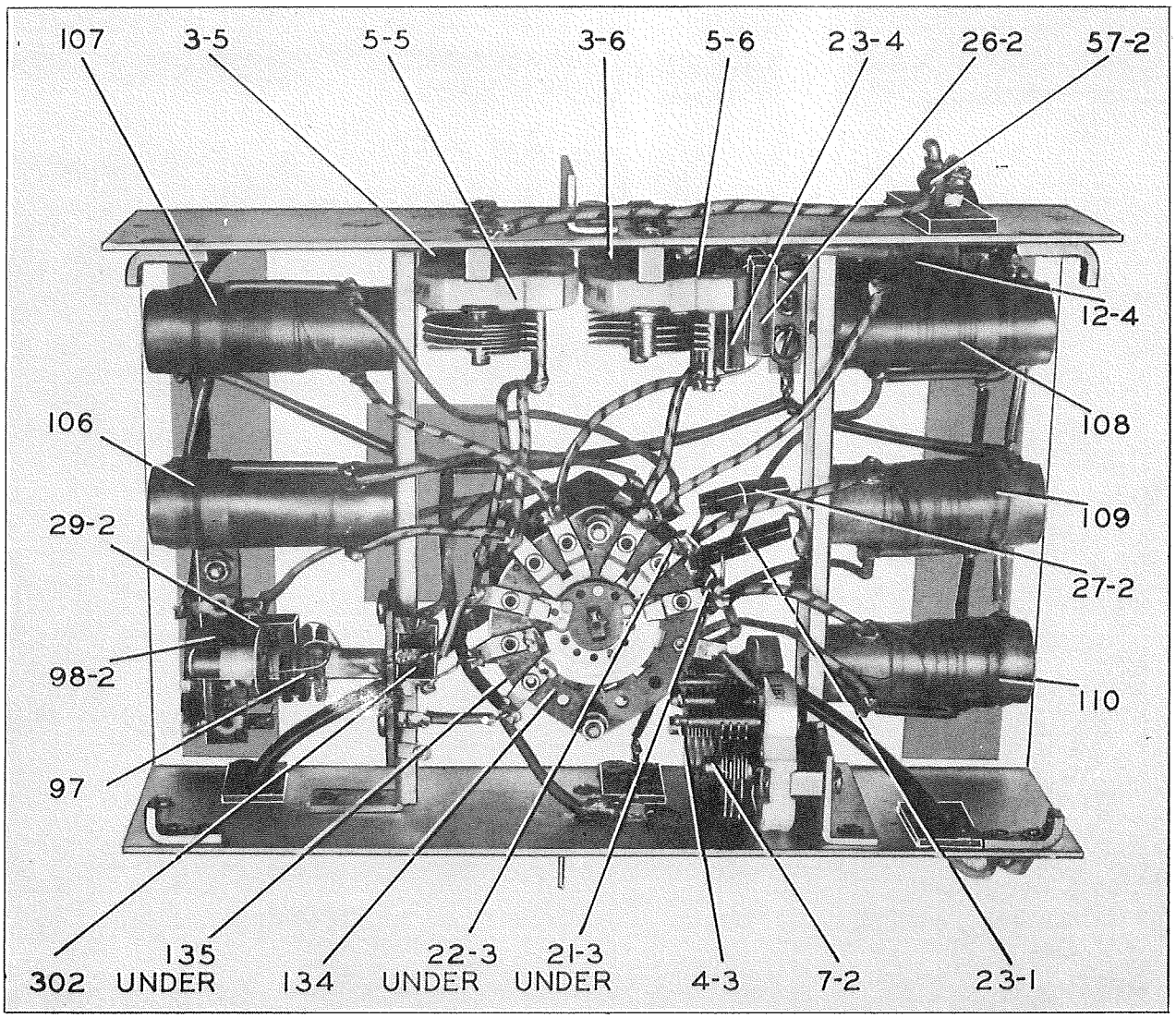

Figure 6–5. Detector Unit

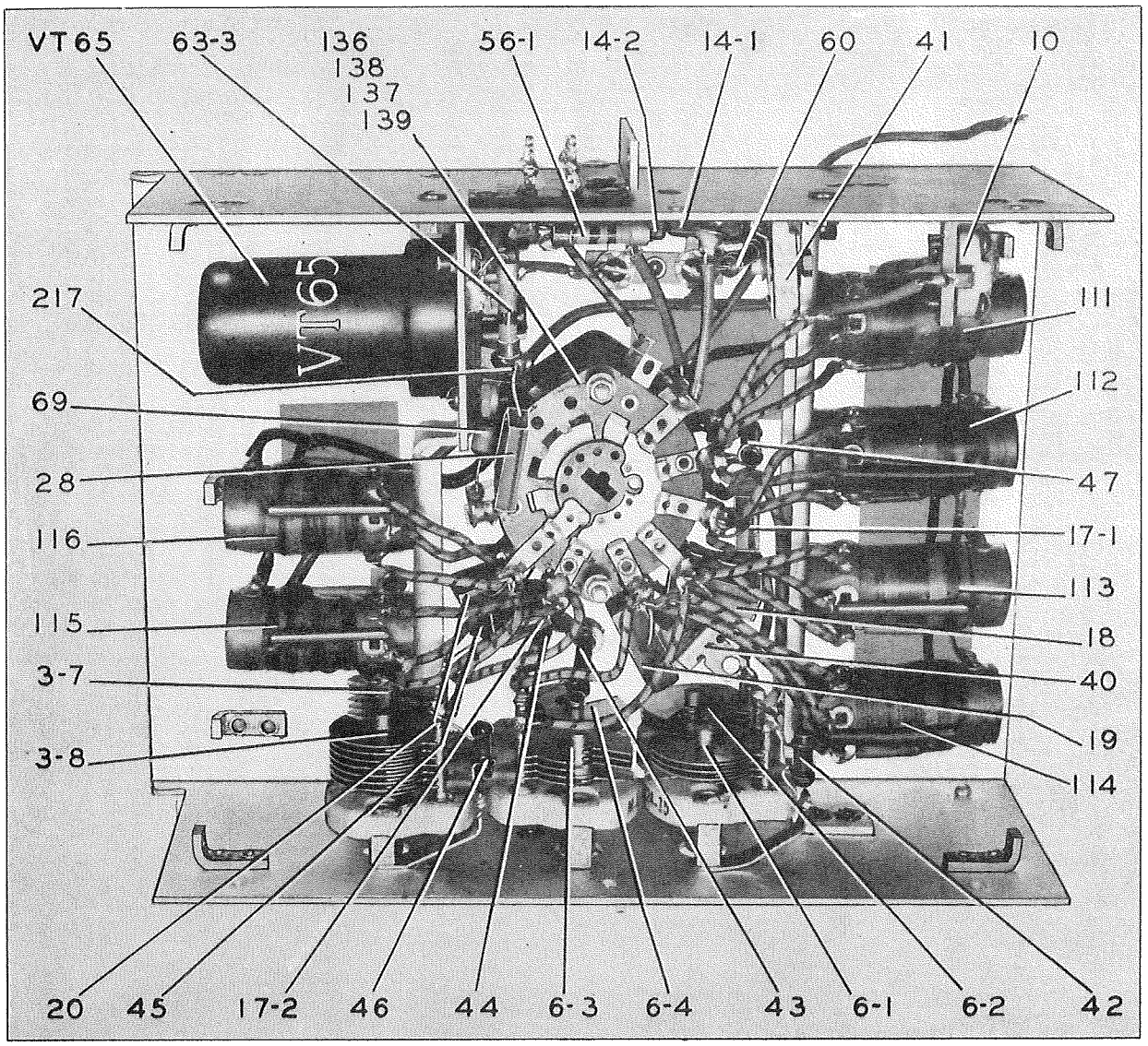

Figure 6–6. Oscillator Unit

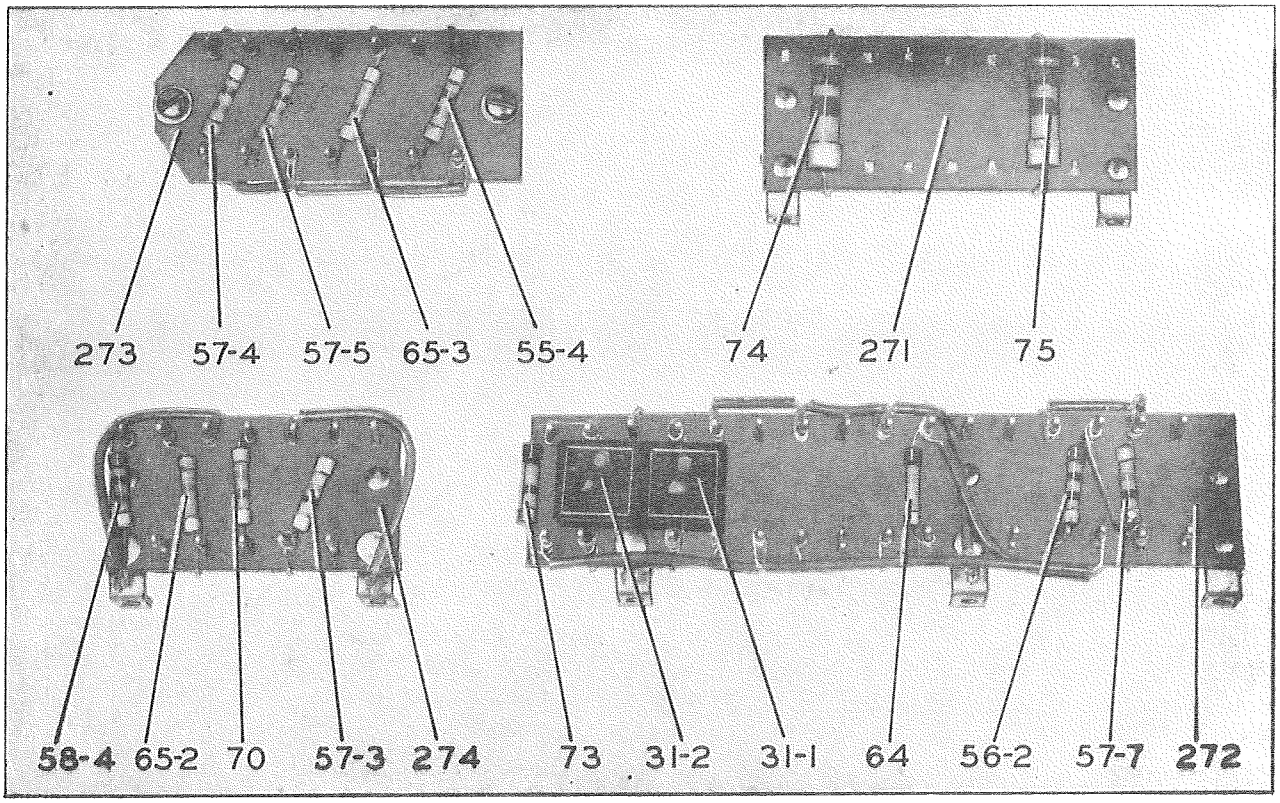

Figure 6–7. Radio Receiver BC-348-(*) or BC-224-(*)—Resistor Boards, View A

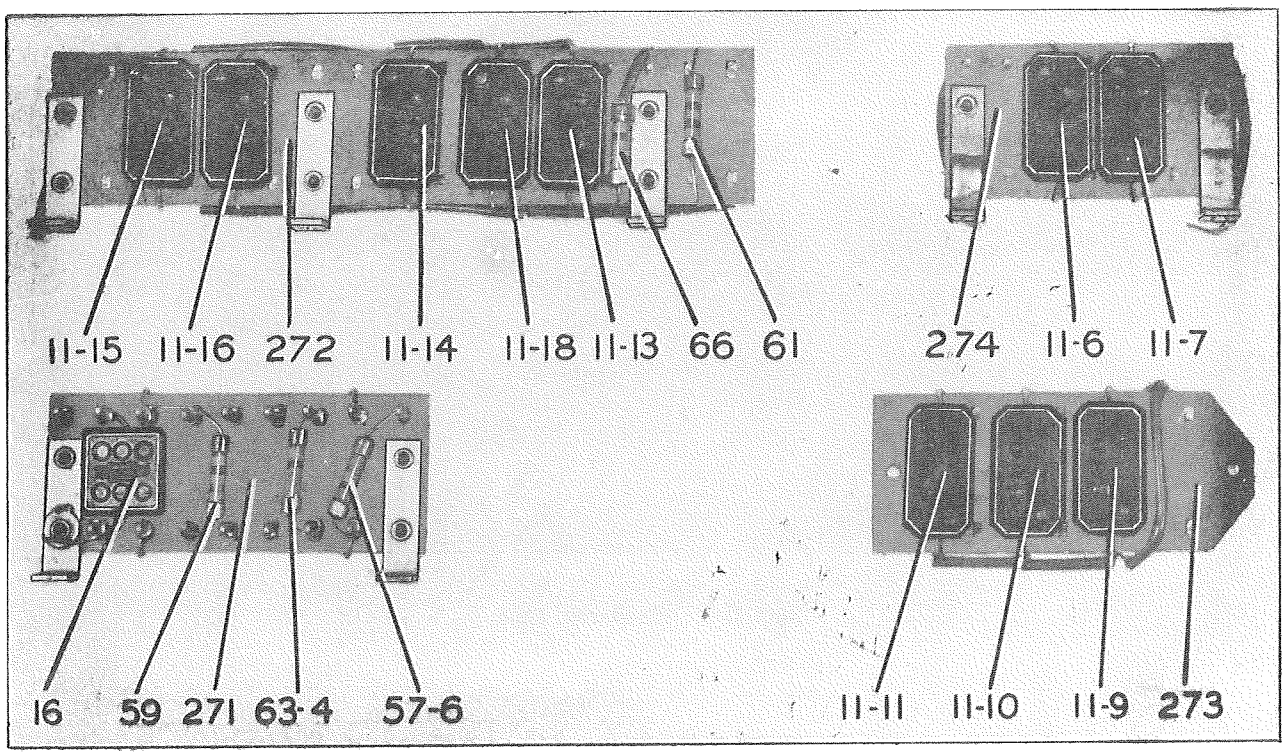

Figure 6–8. Radio Receiver BC-348-(*) or BC-224-(*)—Resistor Boards, View B

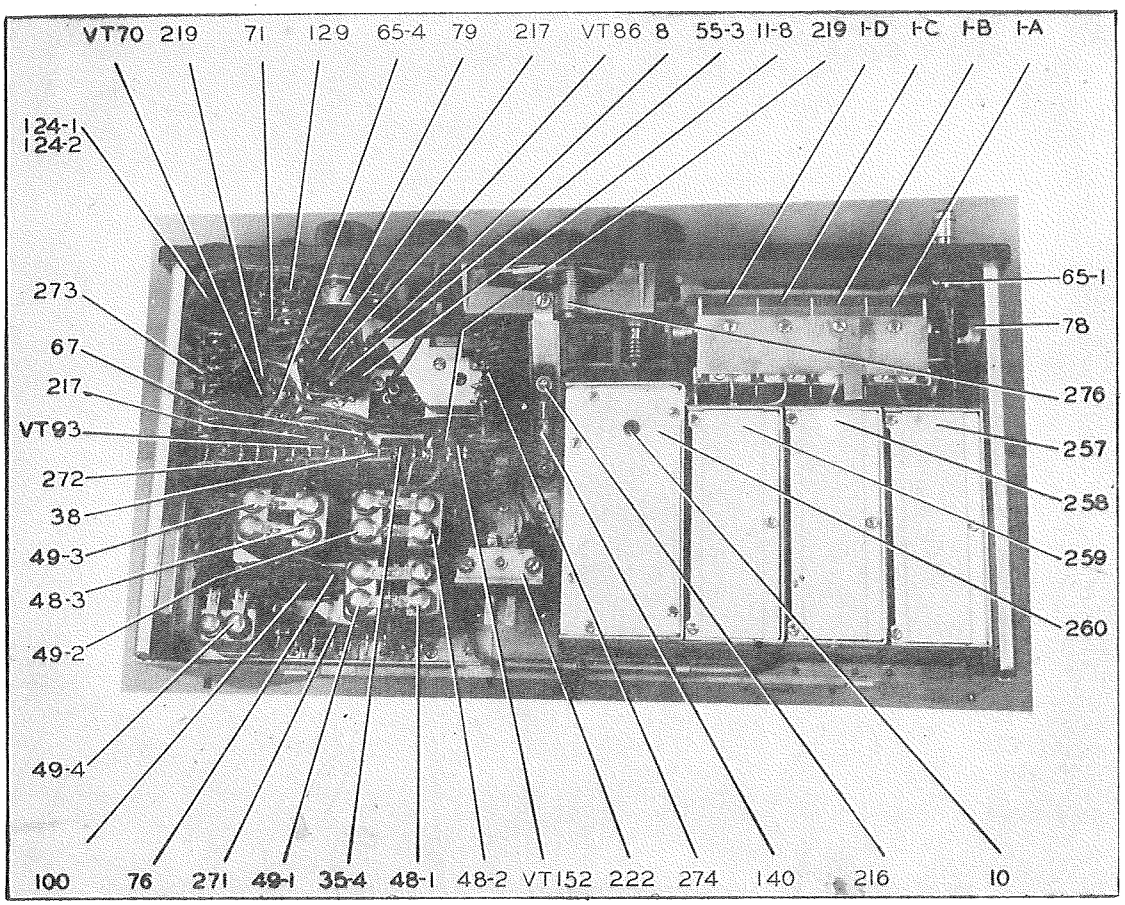

Figure 6–9. Radio Receiver BC-348-(*) or BC-224-(*)—Bottom View of Chassis

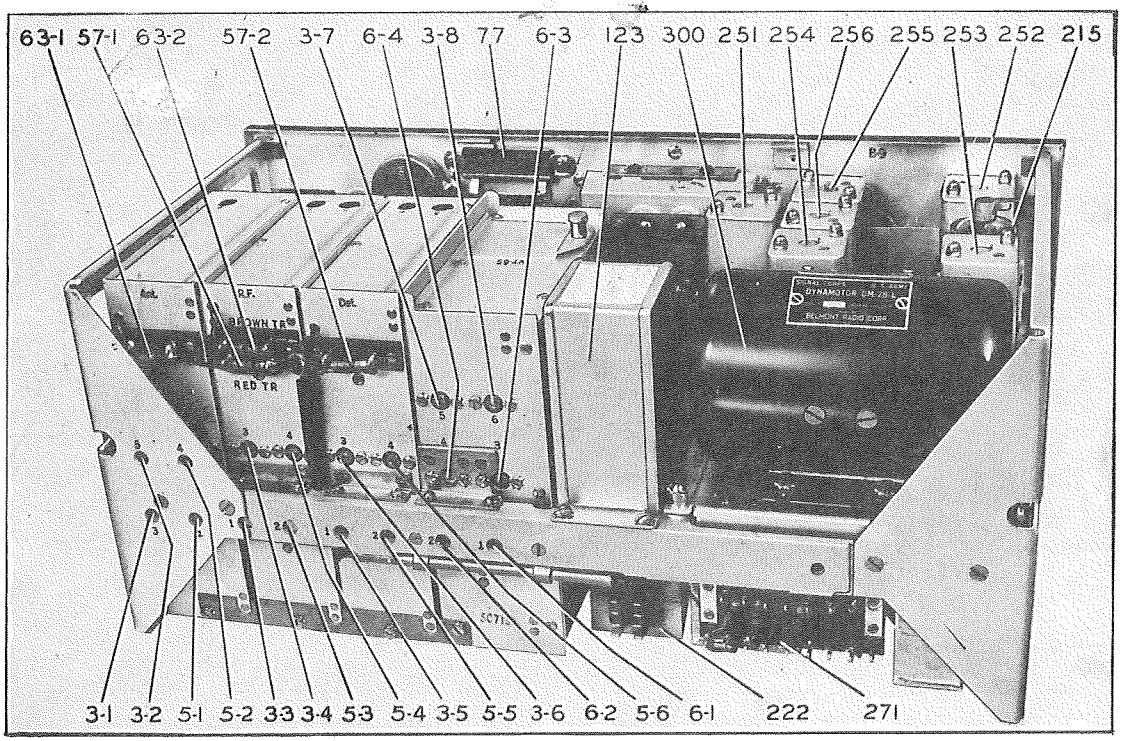

Figure 6–10. Radio Receiver BC-348-(*) or BC-224-(*)—Rear View of Chassis

SECTION VII

TABLE OF REPLACEABLE PARTS

1. CONTENT AND ARRANGEMENT OF TABLE.

a. Listings in the Table of Replaceable Parts do not constitute a complete breakdown of the equipment but consist of all electrical parts and such operative mechanical parts, which the exception of structural and minor parts such as standard bolts, screws, nuts, etc., that are subject to loss or failure.

b. Parts are grouped by major assemblies. Under each major assembly they are listed (1) alphabetically according to type and (2) numerically under each type.

2. ORDERING SPARE PARTS.

a. GENERAL.—Each Service using the Table of Replaceable Parts has established certain depots and service groups for the storage and issue of spare parts. The regulations of each Service should be studied to determine the method of requisitioning spare parts and the sources from which they may be obtained. Information in the table pertaining to manufacturers' or contractors' names, types, models, or drawing numbers is not to be interpreted as authorization to field agencies to attempt to purchase identical or comparable spare parts directly from wholesale or retail stores except under emergency conditions as covered by the existing regulations of the Service concerned.

b. U. S. ARMY PERSONNEL.—The Table of Replaceable Parts is for information *only* and is not to be construed as a list of allowances of maintenance parts or components. Organizations using this equipment will consult applicable AAF Technical Orders of the 00-30 and 00-30A series. Higher maintenance and supply echelons will consult applicable Combat Supply Tables X11A, X11B, X111.

3. EXPLANATION OF SYMBOLS USED.

a. REFERENCE SYMBOLS (COLUMN ONE).—To identify parts of an equipment referred to in the text, in illustrations, and in the Table of Replaceable Parts, a reference symbol is assigned to each part making up a major assembly of an equipment.

Only one reference symbol is assigned to a part, but suffix letters are sometimes added to distinguish between multiple electrical or mechanical characteristics of a part. Example: C-101A, C-101B, and C-101C identify each part of a triple capacitor C-101; K-101A identifies the coil and K-101B the contacts of a relay K-101.

b. CROSS-HATCH SYMBOL (COLUMN TWO).—Cross-hatch symbols (#) appearing in column two indicate that corresponding parts are not included in any concurrently procured spare parts group.

4. ABBREVIATIONS.

Abbreviations used in the Table of Replaceable Parts are as follows:

Abbreviation	*Definition*
AC	alternating current
AF	audio frequency
AM	amplitude modulation
amp	amperes
approx	approximately
AWG	American Wire Gauge
AVC	Automatic volume control
AWS	American War Standard
C	Centigrade
Coef	coefficient
cps	cycles per second
CW	continuous wave
db	decibel (s)
DC	direct current
dia	diameter
dimen	dimension (s)
DPDT	double pole double throw
DPST	double pole single throw
F	Fahrenheit
ft	foot, feet
FM	frequency modulation
hy	henry (s)
"	inch (es)
ID	inner diameter

Abbreviation	*Definition*
IF	intermediate frequency
JAN	joint Army Navy
kc	kilocycle (c)
lg	long
ma	milliampere (s)
max	maximum
mc	megacycle (s)
meg	megohm
min	minimum
mf	microfarad (s)
mmf	micromicrofarad (s)
u sec	microsecond (s)
mh	millihenry
mtd	mounted
mtg	mounting
mts	mounts
OD	outer diameter
%	percent
±	plus or minus
PD	pitch diameter
pri	primary
RF	radio frequency
RMA	Radio Manufacturers' Association
rpm	revolutions per minute
sec	secondary
SPDT	single pole double throw
SPST	single pole single throw
thd	thread (s)
thk	thick
uh	microhenry
UHF	ultra-high-frequency
v	volt (s)
vdcw	DC working volts
VF	video frequency
VHF	very-high frequency
w	watt (s)
wd	wide
ww	wire wound

5. DECIMAL EQUIVALENTS OF WIRE SIZES OF AWG AND SWG (BRITISH).

Size AWG	*Diameter Inches*	*Size AWG*	*Diameter Inches*
0000	.46000	0000	.4000
000	.40964	000	.3720
00	.36480	00	.3480
0	.32486	0	.3240
1	.28930	1	.3000
2	.25763	2	.2760
3	.22942	3	.2520
4	.20431	4	.2320
5	.18194	5	.2120
6	.16202	6	.1900
7	.14428	7	.1760
8	.12849	8	.1600
9	.11442	9	.1440
10	.10190	10	.1280
11	.09074	11	.1160
12	.08081	12	.1040
13	.07196	13	.0920
14	.06408	14	.0800
15	.05707	15	.0720
16	.05082	16	.0640
17	.04526	17	.0560
18	.04030	18	.0480
19	.03589	19	.0400
20	.03196	20	.0360
21	.02846	21	.0320
22	.02535	22	.0280
23	.02257	23	.0240
24	.02010	24	.0220
25	.01790	25	.0200
26	.01594	26	.0180
27	.01420	27	.0164
28	.01264	28	.0148
29	.01126	29	.0136
30	.01003	30	.0124
31	.008928	31	.0116
32	.007950	32	.0108
33	.007080	33	.0100
34	.006305	34	.0092
35	.005615	35	.0084
36	.005000	36	.0076
37	.004453	37	.0068
38	.003965	38	.0060
39	.003531	39	.0052
40	.003145	40	.0048

RESISTOR COLOR CODES

RMA COLOR CODE FOR FIXED COMPOSITION RESISTORS

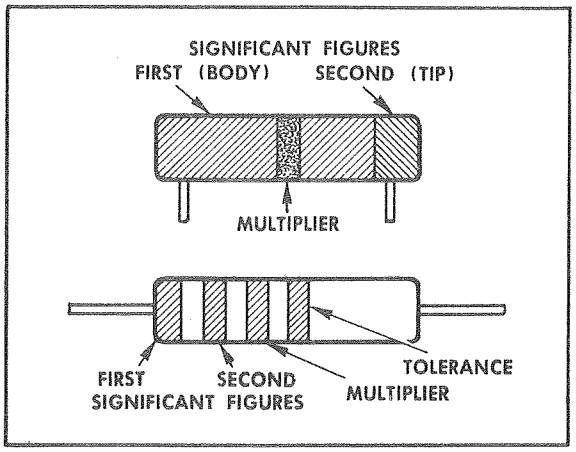

Insulated fixed composition resistors with axial leads are designated by a natural tan background color. Non-insulated fixed composition resistors with axial leads are designated by a black background color.

AWS COLOR CODE FOR FIXED COMPOSITION RESISTORS

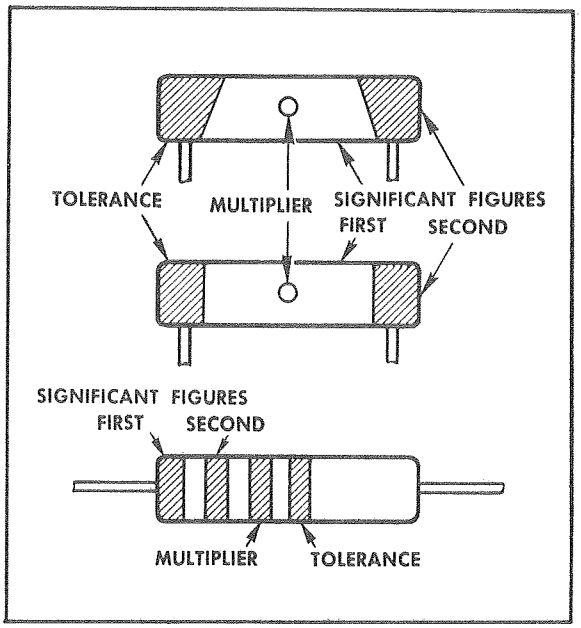

The exterior body color of insulated resistors may be any color except black. The usual color is natural tan. The exterior body color of uninsulated resistors with axial leads may be either black or white. The exterior body color of uninsulated resistors with radial leads may be black or it may be the color of the first significant figure of the resistance value.

COLOR	SIGNIFICANT FIGURE	MULTIPLIER	TOLERANCE (PERCENT)
BLACK	0	1	
BROWN	1	10	
RED	2	100	
ORANGE	3	1000	
YELLOW	4	10,000	
GREEN	5	100,000	
BLUE	6	1,000,000	
VIOLET	7	10,000,000	
GRAY	8	100,000,000	
WHITE	9	1,000,000,000	
GOLD		0.1	5
SILVER		0.01	10
NO COLOR			20

RMA: *Radio Manufacturers Association*

AWS: *American War Standard (American Standards Association)*

TL 13418

CAPACITOR COLOR CODES

RMA 6-DOT COLOR CODE FOR MICA-DIELECTRIC CAPACITORS

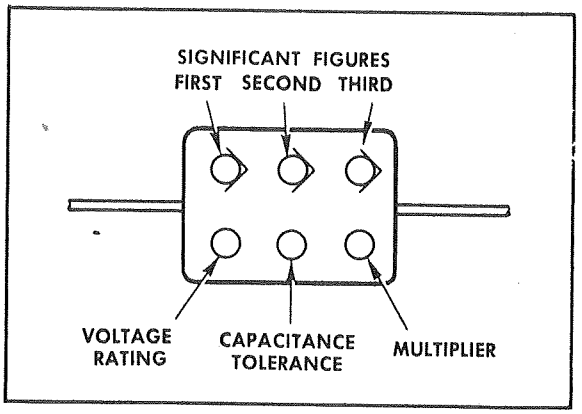

RMA 3-DOT COLOR CODE FOR MICA-DIELECTRIC CAPACITORS

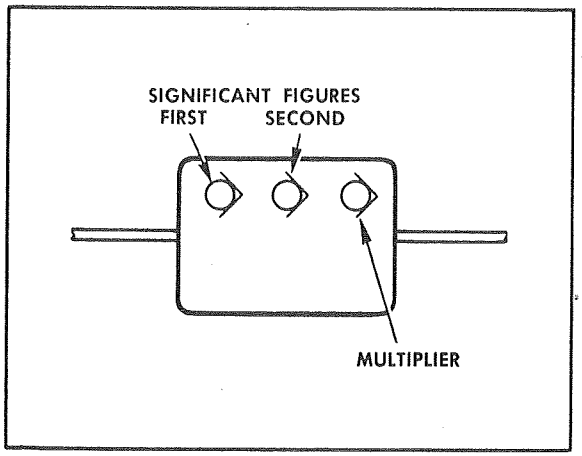

Capacitors marked with this code have a voltage rating of 500 volts.

AWS 6-DOT COLOR CODE FOR PAPER-DIELECTRIC CAPACITORS

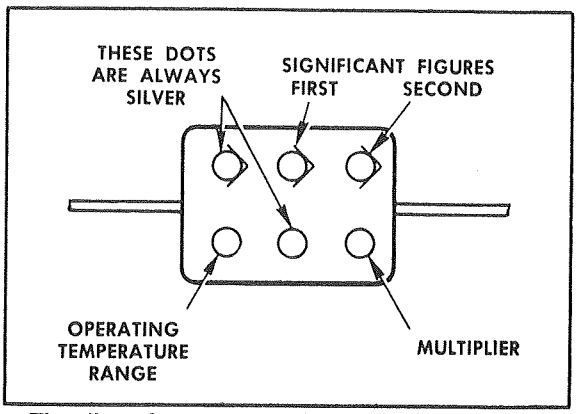

The silver dots serve to identify this marking. The sixth dot shows whether the capacitor has a maximum operating temperature of 167°F (black) or 185°F (brown).

COLOR	SIGNIFICANT FIGURE	MULTIPLIER		VOLTAGE RATING (VOLTS)	CHARACTERISTIC (AWS MICA-DIELECTRIC)
		RMA MICA- AND CERAMIC-DIELECTRIC AWS MICA- AND PAPER-DIELECTRIC	AWS CERAMIC-DIELECTRIC		
BLACK	0	1	1		A
BROWN	1	10	10	100	B
RED	2	100	100	200	C
ORANGE	3	1000	1000	300	D
YELLOW	4	10,000		400	E
GREEN	5	100,000		500	F
BLUE	6	1,000,000		600	G
VIOLET	7	10,000,000		700	
GRAY	8	100,000,000	0.01	800	
WHITE	9	1,000,000,000	0.1	900	
GOLD		0.1		1000	
SILVER		0.01		2000	
NO COLOR				500	

AWS 6-DOT COLOR CODE FOR MICA-DIELECTRIC CAPACITORS

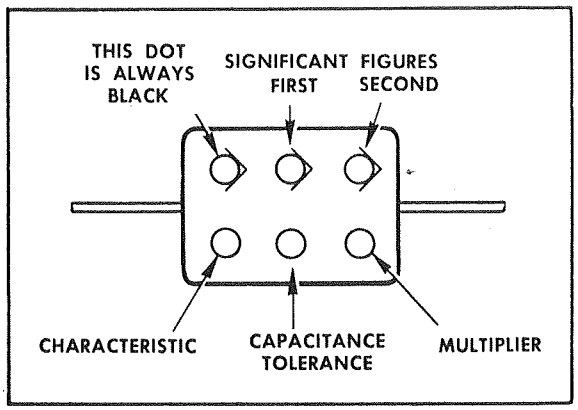

The black dot serves to identify the AWS marking. Capacitors marked with this code are rated at 500 volts, except the following. AWS type CM35 capacitors with capacitances of 6,800, 7,500, and 8,200 micromicrofarads, and AWS type CM40 capacitors with capacitances of 9,100 and 10,000 micromicrofarads are rated at 300 volts.

RMA: *Radio Manufacturers Association*

AWS: *American War Standard (American Standards Association)*

NOTE: These color codes give all capacitances in *micromicrofarads.*

AWS COLOR CODE FOR TUBULAR CERAMIC-DIELECTRIC CAPACITORS

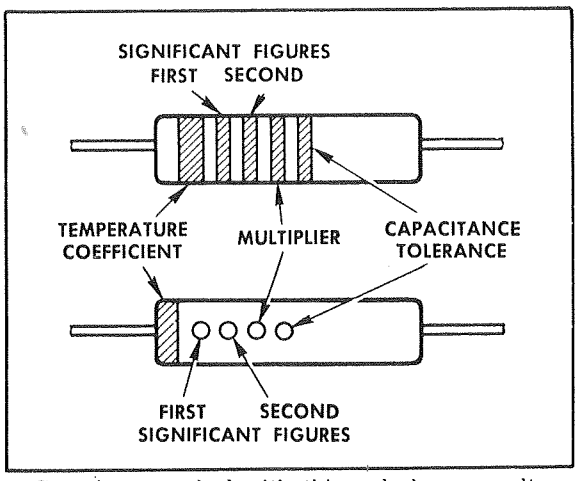

Capacitors marked with this code have a voltage rating of 500 volts.

RMA COLOR CODE FOR TUBULAR CERAMIC-DIELECTRIC CAPACITORS

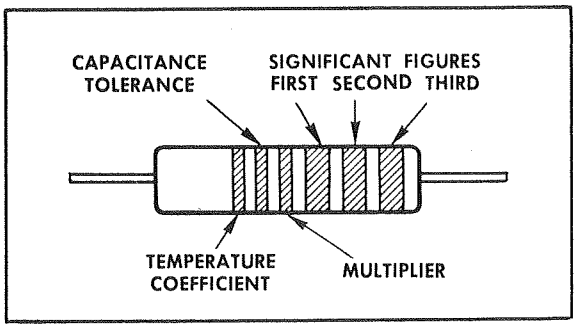

Capacitors marked with this code have a voltage rating of 500 volts.

CAPACITANCE TOLERANCE				TEMPERATURE COEFFICIENT OF CAPACITANCE $\times 10^{-6}$ MMF/MMF/°C
RMA & AWS MICA- AND PAPER-DIELECTRIC (PERCENT)	RMA CERAMIC-DIELECTRIC (PERCENT)	AWS CERAMIC-DIELECTRIC GREATER THAN 10 MMF (PERCENT)	AWS CERAMIC-DIELECTRIC LESS THAN 10 MMF (MMF)	
20	20	20	2.0	0
1	1	1		− 30
2	2	2		− 80
3	3	2.5	0.25	−150
4	4			−220
5	5	5	0.5	−330
6	6			−470
7	7			−750
8	2.5			+ 30
9	10	10	1.0	Not specified
5				
10				
20				TL 13417

35. TABLE OF REPLACEABLE PARTS.

RADIO RECEIVERS BC-348-(*) AND BC-224-(*)

Reference No.	Stock No.	Name of Part and Description	Function	Mfr. and Designation	Drawing No.
1-A, 1-B, 1-C, 1-D	3D9016V-1	CAPACITOR: A Section, 16 to 241 mmfd; B Section, 16 to 241 mmfd; C Section, 16 to 241 mmfd; D Section, 16 to 241 mmfd.	Main Tuning	RC	C-8A-969
2	3D9075V	CAPACITOR: Air Trimmer 75 mmfd max.	Ant. Aligning	RC, OM, or ASP	A-8H-500
3-1	3D9050V-31	CAPACITOR: Air Trimmer 50 mmfd max.	Ant. Trimmer	RC, OM, or ASP	A-8H-495
3-2		CAPACITOR: Air Trimmer 50 mmfd max.	Ant. Trimmer	RC, OM, or ASP	A-8H-495
3-3		CAPACITOR: Air Trimmer 50 mmfd max.	R-F Trimmer	RC, OM, or ASP	A-8H-495
3-4		CAPACITOR: Air Trimmer 50 mmfd max.	R-F Trimmer	RC, OM, or ASP	A-8H-495
3-5		CAPACITOR: Air Trimmer 50 mmfd max.	Det. Trimmer	RC, OM, or ASP	A-8H-495
3-6		CAPACITOR: Air Trimmer 50 mmfd max.	Det. Trimmer	RC, OM, or ASP	A-8H-495
3-7		CAPACITOR: Air Trimmer 50 mmfd max.	Osc. Trimmer	RC, OM, or ASP	A-8H-495
3-8		CAPACITOR: Air Trimmer 50 mmfd max.	Osc. Trimmer	RC, OM, or ASP	A-8H-495
4-1	3D9050V-32	CAPACITOR: Air Trimmer 50 mmfd max.	Ant. Trimmer	RC, OM, or ASP	A-8H-496
4-2		CAPACITOR: Air Trimmer 50 mmfd max.	R-F Trimmer	RC, OM, or ASP	A-8H-496
4-3		CAPACITOR: Air Trimmer 50 mmfd max.	Det. Trimmer	RC, OM, or ASP	A-8H-496
5-1	3D9025V-4	CAPACITOR: Air Trimmer 25 mmfd max.	Ant. Trimmer	RC, OM, or ASP	A-8H-497
5-2		CAPACITOR: Air Trimmer 25 mmfd max.	Ant. Trimmer	RC, OM, or ASP	A-8H-497
5-3		CAPACITOR: Air Trimmer 25 mmfd max.	R-F Trimmer	RC, OM, or ASP	A-8H-497
5-4		CAPACITOR: Air Trimmer 25 mmfd max.	R-F Trimmer	RC, OM, or ASP	A-8H-497
5-5		CAPACITOR: Air Trimmer 25 mmfd max.	Det. Trimmer	RC, OM, or ASP	A-8H-497
5-6		CAPACITOR: Air Trimmer 25 mmfd max.	Det. Trimmer	RC, OM, or ASP	A-8H-497
6-1	3D9025V-5	CAPACITOR: Air Trimmer 25 mmfd max.	Osc. Trimmer	RC, OM, or ASP	A-8H-501
6-2		CAPACITOR: Air Trimmer 25 mmfd max.	Osc. Trimmer	RC, OM, or ASP	A-8H-501
6-3		CAPACITOR: Air Trimmer 25 mmfd max.	Osc. Trimmer	RC, OM, or ASP	A-8H-501
6-4		CAPACITOR: Air Trimmer 25 mmfd max.	Osc. Trimmer	RC, OM, or ASP	A-8H-501
7-1	3D9025V-6	CAPACITOR: Air Trimmer 25 mmfd max.	R-F Trimmer	RC, OM, or ASP	A-8H-716
7-2		CAPACITOR: Air Trimmer 25 mmfd max.	Det. Trimmer	RC, OM, or ASP	A-8H-716

TABLE OF REPLACEABLE PARTS

MODEL: RADIO RECEIVERS BC-348-(*) AND BC-224-(*)

Reference Symbol	Army Stock Number Navy Stock Number British Ref. Number	Name of Part and Description	Function	Mfr. and Desig. or Standard Type	Cont. or Govt. Dwg. or Spec. No.
8	3D9010V-3	CAPACITOR: Air Trimmer 10 mmfd max.	Crystal Filter Adjustment	RC, OM, or ASP	A-8H-499
9	3D9010V-4	CAPACITOR: Air Trimmer 10 mmfd max.	C-W Osc. Adjustment	RC, OM, or ASP	A-8H-498
10	3D9005V	CAPACITOR: Ceramic Trimmer 5 to 30 mmfd.	Osc. Series Pad.	ER	A-8G-738
11-1		CAPACITOR: Paper 500 volts DC .01 mfd ±10% with leads.	1st R-F Cathode By-pass	MR	B-8J-696
11-2		CAPACITOR: Paper 500 volts DC .01 mfd ±10% with leads.	1st R-F Screen By-pass	MR	B-8J-696
11-3		CAPACITOR: Paper 500 volts DC .01 mfd ±10% with leads.	2nd R-F Cathode By-pass	MR	B-8H-696
11-4		CAPACITOR: Paper 500 volts DC .01 mfd ±10% with leads.	2nd R-F Screen By-pass	MR	B-8J-696
11-5		CAPACITOR: Paper 500 volts DC .01 mfd ±10% with leads.	1st DET. Screen By-pass	MR	B-8J-696
11-6		CAPACITOR: Paper 500 volts DC .01 mfd ±10% with leads.	1st I-F Transformer By-pass	MR	B-8J-696
11-7		CAPACITOR: Paper 500 volts DC .01 mfd ±10% with leads.	Crystal Transformer By-pass	MR	B-8J-696
11-8	3DA10-94	CAPACITOR: Paper 500 volts DC .01 mfd ±10% with leads.	1st I-F Cathode By-pass	MR	B-8J-696
11-9		CAPACITOR: Paper 500 volts DC .01 mfd ±10% with leads.	1st I-F Plate By-pass	MR	B-8J-696
11-10		CAPACITOR: Paper 500 volts DC .01 mfd ±10% with leads.	2nd I-F By-pass	MR	B-8J-696
11-11		CAPACITOR: Paper 500 volts DC .01 mfd ±10% with leads.	2nd I-F Cathode By-pass	MR	B-8J-696
11-12		CAPACITOR: Paper 500 volts DC .01 mfd ±10% with leads.	C-W Osc. Plate By-pass	MR	B-8J-696
11-13		CAPACITOR: Paper 500 volts DC .01 mfd ±10% with leads.	Plug Terminal By-pass	MR	B-8J-696
11-14		CAPACITOR: Paper 500 volts DC .01 mfd ±10% with leads.	AVC By-pass	MR	B-8J-696
11-15		CAPACITOR: Paper 500 volts DC .01 mfd ±10% with leads.	3rd I-F Transformer By-pass	MR	B-8J-696

11-16		CAPACITOR: Paper 500 volts DC .01 mfd ±10% with leads.	3rd I-F Cathode By-pass	MR	B-8J-696
11-17	3DA10-94	CAPACITOR: Paper 500 volts DC .01 mfd ±10% with leads.	Heater By-pass	MR	B-8J-696
11-18		CAPACITOR: Paper 500 volts DC .01 mfd ±10% with leads.	Battery By-pass	MR	B-8J-696
12-1		CAPACITOR: Mica 300 volts DC .01 mfd ±10% with lugs.	Ant. Coil By-pass	CD or SM	B-8F-363
12-2	3DA10-50	CAPACITOR: Mica 300 volts DC .01 mfd ±10% with lugs.	Ant. Coil By-pass	CD or SM	B-8F-363
12-3		CAPACITOR: Mica 300 volts DC .01 mfd ±10% with lugs.	1st R-F Plate By-pass	CD or SM	B-8F-363
12-4		CAPACITOR: Mica 300 volts DC .01 mfd ±10% with lugs.	2nd R-F Plate By-pass	CD or SM	B-8F-363
13-1	3DA10-99	CAPACITOR: Mica 300 volts DC .01 mfd ±10% with lugs.	R-F Coil By-pass	CD or SM	B-8F-363
13-2		CAPACITOR: Mica 300 volts DC .01 mfd ±10% with lugs.	R-F Coil By-pass	CD or SM	B-8F-363
14-1	3DA10-97	CAPACITOR: Mica 300 volts DC .01 mfd ±10% with lugs.	1st Det. Cathode By-pass	CD or SM	B-8F-363
14-2		CAPACITOR: Mica 300 volts DC .01 mfd ±10% with lugs.	Osc. Plate By-pass	CD or SM	B-8F-363
15	3DA10-95	CAPACITOR: Mica 300 volts DC .01 mfd ±10% with leads.	Antenna Series Pad	CD or SM	B-8F-506
16	3DA5-32	CAPACITOR: Mica 500 volts DC .005 mfd ±10% with leads.	Audio Frequency Secondary By-pass	MR or SM	B-8F-512
17-1	3D9500-52	CAPACITOR: Mica 500 volts DC 500 mmfd ±1½% with leads.	Osc. Series	MR or SM	B-8F-744
17-2		CAPACITOR: Mica 500 volts DC 500 mmfd ±1½% with leads.	Osc. Series	MR or SM	B-8F-744
18	3DA1.70-1	CAPACITOR: Mica 500 volts DC 1700 mmfd ±2% with leads.	Osc. Series	MR or SM	B-8F-745
19	3DA2.650	CAPACITOR: Mica 500 volts DC 2650 mmfd ±2% with leads.	Osc. Series	MR or SM	B-8F-746
20	3D9210	CAPACITOR: Mica 500 volts DC 210 mmfd ±1½% with leads.	Osc. Series	MR or SM	B-8F-747
21-1		CAPACITOR: Mica 500 volts DC 200 mmfd ±3% with leads.	Ant. Series	MR or SM	B-8F-734
21-2	3D9200-22	CAPACITOR: Mica 500 volts DC 200 mmfd ±3% with leads.	R-F Series	MR or SM	B-8F-734
21-3		CAPACITOR: Mica 500 volts DC 200 mmfd ±3% with leads.	Det. Series	MR or SM	B-8F-734

TABLE OF REPLACEABLE PARTS

MODEL: RADIO RECEIVERS BC-348-(*) AND BC-224-(*)

Reference Symbol	Army Stock Number / Navy Stock Number / British Ref. Number	Name of Part and Description	Function	Mfr. and Desig. or Standard Type	Cont. or Govt. Dwg. or Spec. No.
22-1	3D9400-14	CAPACITOR: Mica 500 volts DC 400 mmfd ±1½% with leads.	Ant. Series	MR or SM	B-8F-735
22-2		CAPACITOR: Mica 500 volts DC 400 mmfd ±1½% with leads.	R-F Series	MR or SM	B-8F-735
22-3		CAPACITOR: Mica 500 volts DC 400 mmfd ±1½% with leads.	Det. Series	MR or SM	B-8F-735
23-1	3D9040-8	CAPACITOR: Mica 500 volts DC 40 mmfd ±10% with leads.	Det. Shunt	MR or SM	B-8F-732
23-2		CAPACITOR: Mica 500 volts DC 40 mmfd ±10% with leads.	R-F Shunt	MR or SM	B-8F-732
23-3		CAPACITOR: Mica 500 volts DC 40 mmfd ±10% with leads.	R-F Shunt	MR or SM	B-8F-732
23-4		CAPACITOR: Mica 500 volts DC 40 mmfd ±10% with leads.	Det. Shunt	MR or SM	B-8F-732
24-1	3D9025-25	CAPACITOR: Mica 500 volts DC 25 mmfd ±10% with leads.	Ant. Shunt	MR or SM	B-8F-755
24-2		CAPACITOR: Mica 500 volts DC 25 mmfd ±10% with leads.	Ant. Shunt	MR or SM	B-8F-755
25	3D9065	CAPACITOR: Mica 500 volts DC 65 mmfd ±5% with leads.	Ant. Shunt	MR or SM	B-8F-756
26-1	3D9095	CAPACITOR: Mica 500 volts DC 95 mmfd ±5% with leads.	R-F Shunt	MR or SM	B-8F-733
26-2		CAPACITOR: Mica 500 volts DC 95 mmfd ±5% with leads.	Det. Shunt	MR or SM	B-8F-733
27-1	3D9070-3	CAPACITOR: Mica 500 volts DC 70 mmfd ±8% with leads.	R-F Shunt	MR or SM	B-8F-736
27-2		CAPACITOR: Mica 500 volts DC 70 mmfd ±8% with leads.	Det. Shunt	MR or SM	B-8F-736
28	3D9100-55	CAPACITOR: Mica 500 volts DC 100 mmfd ±5% with leads.	Osc. Grid	MR or SM	B-8F-743
29-1	3DA1.250-1	CAPACITOR: Mica 500 volts DC 1250 mmfd ±10% with leads.	R-F Primary Shunt	MR or SM	B-8F-776
29-2		CAPACITOR: Mica 500 volts DC 1250 mmfd ±10% with leads.	Det. Primary Shunt	MR or SM	B-8F-776

30-1	3D9002-7	CAPACITOR: Mica 500 volts DC 2 mmfd ±½ mmfd with leads.	R-F Coupling	MR or SM	A-8G-754
30-2	3D9002-7	CAPACITOR: Mica 500 volts DC 2 mmfd ±½ mmfd with leads.	Det. Coupling	MR or SM	A-8G-754
31-1	3DA1.500-1	CAPACITOR: Mica 500 volts DC 1500 mmfd ±10% with leads.	Audio Coupling	MR or SM	B-8F-514
31-2		CAPACITOR: Mica 500 volts DC 1500 mmfd ±10% with leads.	Audio Transformer Primary Shunt	MR or SM	B-8F-514
32	3D9200-23	CAPACITOR: Mica 500 volts DC 200 mmfd +5% −10% with leads.	1st I-F Primary Tuning	MR or SM	B-8F-828
33	3D9300-5	CAPACITOR: Mica 500 volts DC 300 mmfd +5% −10% with leads.	1st I-F Secondary Tuning	MR or SM	B-8F-829
34-1	3D9260-3	CAPACITOR: Mica 500 volts DC 260 mmfd +5% −10% with leads.	Crystal Transformer Tuning	MR or SM	B-8F-675
34-2		CAPACITOR: Mica 500 volts DC 260 mmfd +5% −10% with leads.	3rd I-F Primary	MR or SM	B-8F-675
34-3		CAPACITOR: Mica 500 volts DC 260 mmfd +5% −10% with leads.	3rd I-F Secondary Tuning	MR or SM	B-8F-675
35-1	3D9240-1	CAPACITOR: Mica 500 volts DC 240 mmfd +5% −10% with leads.	2nd I-F Primary Tuning	MR or SM	B-8F-692
35-2		CAPACITOR: Mica 500 volts DC 240 mmfd +5% −10% with leads.	2nd I-F Secondary Tuning	MR or SM	B-8F-692
35-3		CAPACITOR: Mica 500 volts DC 240 mmfd +5% −10% with leads.	C-W Osc. Tuning	MR or SM	B-8F-692
35-4		CAPACITOR: Mica 500 volts DC 240 mmfd +5% −10% with leads.	2nd Det. By-pass	MR or SM	B-8F-692
36	3D9047-3	CAPACITOR: Mica 500 volts DC 47 mmfd +5% −10% with leads.	4th I-F Primary Tuning	MR or SM	B-8F-827
37-1	3D9150-9	CAPACITOR: Mica 500 volts DC 150 mmfd +5% −10% with leads.	4th I-F Secondary Tuning	MR or SM	B-8F-674
37-2		CAPACITOR: Mica 500 volts DC 150 mmfd +5% −10% with leads.	C-W Osc. Grid	MR or SM	B-8F-674
38	3D9075-4	CAPACITOR: Mica 500 volts DC 75 mmfd ±5% with leads.	Diode Coupling	MR or SM	B-8F-693
39	3D9750-3	CAPACITOR: Mica 500 volts DC 750 mmfd +5% −10% with leads.	1st I-F Secondary Tuning	MR or SM	B-8F-830
40*	3D9006-3	CAPACITOR: Mica 500 volts DC 4.8 mmfd ±.2 mmfd with lugs.	Osc. Temperature Compensating	UE	A-8E-968
40†	3D9006-3	CAPACITOR: Mica 500 volts DC 6 mmfd ±.2 mmfd with lugs.	Osc. Temperature Compensating	UE	B-8F-740

* Used with Radio Receiver BC-348-L only.
† Used with Radio Receiver BC-348-H and BC-348-K only.

TABLE OF REPLACEABLE PARTS

MODEL: RADIO RECEIVERS BC-348-(*) AND BC-224-(*)

Reference Symbol	*Army Stock Number Navy Stock Number British Ref. Number*	*Name of Part and Description*	*Function*	*Mfr. and Desig. or Standard Type*	*Cont. or Govt. Dwg. or Spec. No.*
40‡		CAPACITOR: Mica 500 volts DC 4.1 mmfd ±.2 mmfd with lugs.	Osc. Temperature Compensating	UE	A-8E-3662
40**	3D9004E8	CAPACITOR: Mica 500 volts DC 6 mmfd ±.2 mmfd with lugs.	Osc. Temperature Compensating	UE	B-8F-740
41*	3D9003E8	CAPACITOR: Mica 500 volts DC 3.5 mmfd ±.2 mmfd with lugs.	Osc. Temperature Compensating	UE	A-8E-967
41†	3D9003E8	CAPACITOR: Mica 500 volts DC 3.8 mmfd ±.2 mmfd with lugs.	Osc. Temperature Compensating	UE	B-8F-739
41‡		CAPACITOR: Mica 500 volts DC 4.2 mmfd ±.2 mmfd with lugs.	Osc. Temperature Compensating	UE	A-8E-3661
41**	3D9003E5	CAPACITOR: Mica 500 volts DC 3.8 mmfd ±.2 mmfd with lugs.	Osc. Temperature Compensating	UE	B-8F-739
42	3D9020-6	CAPACITOR: Ceramic 500 volts DC 20 mmfd ±5% with leads.	Osc. Temperature Compensating	CRL	A-8G-748
43	3D9065-1	CAPACITOR: Ceramic 500 volts DC 65 mmfd ±5% with leads.	Osc. Temperature Compensating	CRL	A-8G-749
44	3D9090-4	CAPACITOR: Ceramic 500 volts DC 90 mmfd ±3% with leads.	Osc. Temperature Compensating	CRL	A-8G-750
45	3D9035-2	CAPACITOR: Ceramic 500 volts DC 35 mmfd ±5% with leads.	Osc. Temperature Compensating	CRL	A-8G-751
46	3D9040-9	CAPACITOR: Ceramic 500 volts DC 40 mmfd ±5% with leads.	Osc. Temperature Compensating	CRL	A-8G-752
47	3D9085-1	CAPACITOR: Ceramic 500 volts DC 85 mmfd ±3% with leads.	Osc. Series	CRL	A-8G-753
48-1A	3DA500-47	CAPACITOR: Paper 250 volts DC .5 mfd ±15%.	4th I-F Transformer Filter	SM or SS	A-8B-516
48-1B		CAPACITOR: Paper 250 volts DC .5 mfd ±15%.	Noise Compensator Filter	SM or SS	A-8B-516
48-2A		CAPACITOR: Paper 250 volts DC .5 mfd ±15%.	Screen Supply Filter	SM or SS	A-8B-516
48-2B		CAPACITOR: Paper 250 volts DC .5 mfd ±15%.	Output Plate Filter	SM or SS	A-8B-516
48-3A		CAPACITOR: Paper 250 volts DC .5 mfd ±15%.	Volume Control Filter	SM or SS	A-8B-515
48-3B		CAPACITOR: Paper 250 volts DC .5 mfd ±15%.	3rd I-F Screen Filter	SM or SS	A-8B-515
49-1A	3DA500-42	CAPACITOR: Paper 250 volts DC .5 mfd ±15%.	4th I-F Transformer Filter	SM or SS	A-8B-515

49-1B		CAPACITOR: Paper 250 volts DC .5 mfd ±15%.	4th I-F Transformer Filter	SM or SS	A-8B-515
49-2A		CAPACITOR: Paper 250 volts DC .5 mfd ±15%.	Output Grid Filter	SM or SS	A-8B-515
49-2B		CAPACITOR: Paper 250 volts DC .5 mfd ±15%.	Screen Supply Filter	SM or SS	A-8B-515
49-3A	3DA500-42	CAPACITOR: Paper 250 volts DC .5 mfd ±15%.	1st I-F Screen Filter	SM or SS	A-8B-516
49-3B		CAPACITOR: Paper 250 volts DC .5 mfd ±15%.	1st I-F Screen Filter	SM or SS	A-8B-516
49-4A		CAPACITOR: Paper 250 volts DC .5 mfd ±15%.	Battery Filter	SM or SS	A-8B-515
49-4B		CAPACITOR: Paper 250 volts DC .5 mfd ±15%.	Battery Filter	SM or SS	A-8B-515
55-1		RESISTOR: Insul. 470 ohms ±10% ½ watt.	1st R-F Cathode	CRL	A-9B1-58
55-2	3Z6047-1	RESISTOR: Insul. 470 ohms ±10% ½ watt.	2nd R-F Cathode	CRL	A-9B1-58
55-3		RESISTOR: Insul. 470 ohms ±10% ½ watt.	1st I-F Cathode	CRL	A-9B1-58
55-4		RESISTOR: Insul. 470 ohms ±10% ½ watt.	2nd I-F Cathode	CRL	A-9B1-58
56-1	3Z6100-49	RESISTOR: Insul. 1000 ohms ±10% ½ watt.	Osc. Plate	CRL	A-9B1-62
56-2		RESISTOR: Insul. 1000 ohms ±10% ½ watt.	3rd I-F Cathode	CRL	A-9B1-62
57-1		RESISTOR: Insul. 4700 ohms ±10% ½ watt.	1st R-F Plate	CRL	A-9B1-70
57-2		RESISTOR: Insul. 4700 ohms ±10% ½ watt.	2nd R-F Plate	CRL	A-9B1-70
57-3		RESISTOR: Insul. 4700 ohms ±10% ½ watt.	1st Det. Plate	CRL	A-9B1-70
57-4	3Z6470	RESISTOR: Insul. 4700 ohms ±10% ½ watt.	1st I-F Screen	CRL	A-9B1-70
57-5		RESISTOR: Insul. 4700 ohms ±10% ½ watt.	1st I-F Plate	CRL	A-9B1-70
57-6		RESISTOR: Insul. 4700 ohms ±10% ½ watt.	Bleeder	CRL	A-9B1-70
57-7		RESISTOR: Insul. 4700 ohms ±10% ½ watt.	3rd I-F Cathode	CRL	A-9B1-70
58-1		RESISTOR: Insul. 10,000 ohms ±10% ½ watt.	1st R-F Screen	CRL	A-9B1-74
58-2	3Z6610-49	RESISTOR: Insul. 10,000 ohms ±10% ½ watt.	2nd R-F Screen	CRL	A-9B1-74
58-3		RESISTOR: Insul. 10,000 ohms ±10% ½ watt.	1st Det. Screen	CRL	A-9B1-74
58-4		RESISTOR: Insul. 10,000 ohms ±10% ½ watt.	C-W Osc. Bleeder	CRL	A-9B1-84
59	3Z6612-7	RESISTOR: Insul. 12,000 ohms ±10% ½ watt.	Voltage Regulator Series	CRL	A-9B1-75
60	3Z6615-25	RESISTOR: Insul. 15,000 ohms ±10% ½ watt.	1st Det. Cathode	CRL	A-9B1-76
61	3Z6656-3	RESISTOR: Insul. 56,000 ohms ±10% ½ watt.	Output Loading	CRL	A-9B1-83
62	3Z6668-2	RESISTOR: Insul. 68,000 ohms ±10% ½ watt.	C-W Osc. Plate	CRL	A-9B1-84

* Used with Radio Receiver BC-348-L only.
† Used with Radio Receiver BC-348-H and BC-348-K only.
‡ Used with Radio Receiver BC-348-R only.
** Used with Radio Receiver BC-224-F and BC-224-K only.

TABLE OF REPLACEABLE PARTS

MODEL: RADIO RECEIVERS BC-348-(*) AND BC-224-(*)

Reference Symbol	Army Stock Number Navy Stock Number British Ref. Number	Name of Part and Description	Function	Mfr. and Desig. or Standard Type	Cont. or Govt. Dwg. or Spec. No.
63-1	3Z6700-44	RESISTOR: Insul. 100,000 ohms ±10% ½ watt.	1st R-F Grid	CRL	A-9B1-86
63-2		RESISTOR: Insul. 100,000 ohms ±10% ½ watt.	2nd R-F Grid	CRL	A-9B1-86
63-3		RESISTOR: Insul. 100,000 ohms ±10% ½ watt.	Osc. Grid	CRL	A-9B1-86
63-4		RESISTOR: Insul. 100,000 ohms ±10% ½ watt.	Output Grid Filter	CRL	A-9B1-86
64	3Z6718-2	RESISTOR: Insul. 180,000 ohms ±10% ½ watt.	3rd I-F Screen	CRL	A-9B1-89
65-1	3Z6747-4	RESISTOR: Insul. 470,000 ohms ±10% ½ watt.	Antenna protective	CRL	A-9B1-94
65-2		RESISTOR: Insul. 470,000 ohms ±10% ½ watt.	1st I-F Grid	CRL	A-9B1-94
65-3		RESISTOR: Insul. 470,000 ohms ±10% ½ watt.	2nd I-F Grid	CRL	A-9B1-94
65-4		RESISTOR: Insul. 470,000 ohms ±10% ½ watt.	C-W Osc. Grid	CRL	A-9B1-94
66	3Z6756-2	RESISTOR: Insul. 560,000 ohms ±10% ½ watt.	Output Grid	CRL	A-9B1-95
67	3Z6801A5-5	RESISTOR: Insul. 1.5 megohms ±10% ½ watt.	AVC Diode	CRL	A-9B1-100
68	3Z6722-3	RESISTOR: Insul. 220,000 ohms ±10% ½ watt.	AVC Filter	CRL	A-9B1-90
69	3Z6007E11	RESISTOR: Insul. 75 ohms ±10% ½ watt.	Osc. Compensating	CRL	A-9B-726
70	3Z6647-4	RESISTOR: Insul. 47,000 ohms ±10% ½ watt.	Bleeder	CRL	A-9B1-82
73		RESISTOR: Insul. 2,400 ohms ±5% 1 watt.	Output Plate	CRL	A-9B2-168
74	3Z6610-48	RESISTOR: Insul. 10,000 ohms ±10% 1 watt.	Bleeder	CRL	A-9B2-74
75	3Z6627-4	RESISTOR: Insul. 27,000 ohms ±10% 1 watt.	Voltage Regulator	CRL	A-9B2-79
76-A	3Z6019	RESISTOR: Insul. 3 ohms ±10% 1.5 watts.	Filament	IRC	A-9D-519
76-B*		RESISTOR: Insul. 190 ohms ±10% 1.9 watts.	Filament	IRC	A-9D-519
76†	3Z5985	RESISTOR: Insul. .50 ohms ±10% 1 watt.	Filament	IRC	A-9B-854
77†	3Z6006H3	RESISTOR: Insul. 68 ohms ±10% 1 watt.	Filament	IRC	A-9B-853
77*	3Z6006-5	RESISTOR: Insul. 60 ohms ±10% 3.7 watts.	Lamp Series 60¼A	IRC	A-9D-317
78	3Z6350-6	RESISTOR: Variable 3500 ±10% to 10 ohms .1 watt.	Noise Compensator	IRC	A-9A-714

79-A	2C4348H/R1	RESISTOR: Volume Control Front Unit 20,000 ohms ±10% to 10 ohms .2 watt.	MVC	AB	B-10A-295
79-B		RESISTOR: Volume Control Back Unit 350,000 ohms ±10% to 50 ohms .2 watt.	AVC	AB	B-10A-295
80*	2C4348H/R2	RESISTOR: Variable 200 ohms ±10% 4 watts.	Dial Lamp Control	PRM	A-9A-304
80†	2C4348H/R2	RESISTOR: Variable 75 ohms ±10% 1.5 watt.	Dial Lamp Control	PRM	A-9A-304-2
90		INDUCTANCE: Antenna Band 1.	1st R-F Tuned Circuit		B-204-107
91		INDUCTANCE: Antenna Band 2.	1st R-F Tuned Circuit		C-204-75-1
92		INDUCTANCE: Antenna Band 3.	1st R-F Tuned Circuit		C-204-75-4
93		INDUCTANCE: Antenna Band 4.	1st R-F Tuned Circuit		C-204-75-7
94		INDUCTANCE: Antenna Band 5.	1st R-F Tuned Circuit		C-204-75-10
95		INDUCTANCE: Antenna Band 6.	1st R-F Tuned Circuit		C-204-75-13
96		INDUCTANCE: R-F Band 1.	1st R-F to 2nd R-F Coupling		B-204-109
97		INDUCTANCE: 1st Det. Band 1.	2nd R-F to 1st Det. Coupling		B-204-105
98-1		INDUCTANCE: R-F Band 1.	Plate Load 1st R-F		A-204-103
98-2		INDUCTANCE: Det. Band 1.	Plate Load 2nd R-F		A-204-103
100	2C4348H/C3	INDUCTANCE: R-F Choke.	Power Supply Filter		A-201-102
101		TRANSFORMER: R-F Band 2.	1st R-F to 2nd R-F Coupling		C-204-75-2
102		TRANSFORMER: T-F Band 3.	1st R-F to 2nd R-F Coupling		C-204-75-5
103		TRANSFORMER: R-F Band 4.	1st R-F to 2nd R-F Coupling		C-204-75-8
104		TRANSFORMER: R-F Band 5.	1st R-F to 2nd R-F Coupling		C-204-75-11
105		TRANSFOMER: R-F Band 6.	1st R-F to 2nd R-F Coupling		C-204-75-14
106		TRANSFORMER: 1st Det. Band 2.	2nd R-F to Det. Coupling		C-204-75-3
107		TRANSFORMER: 1st Det. Band 3.	2nd R-F to Det. Coupling		C-204-75-5
108		TRANSFORMER: 1st Det. Band 4.	2nd R-F to Det. Coupling		C-204-75-9
109		TRANSFORMER: 1st Det. Band 5.	2nd R-F to Det. Coupling		C-204-75-12
110		TRANSFORMER: 1st Det. Band 6.	2nd R-F to Det. Coupling		C-204-75-15
111		TRANSFORMER: Osc. Band 1.	Osc. to 1st Det. Coupling		C-204-65-1
112		TRANSFORMER: Osc. Band 2.	Osc. to 1st Det. Coupling		C-204-65-2
113		TRANSFORMER: Osc. Band 3.	Osc. to 1st Det. Coupling		C-204-65-3

* Used with Radio Receiver BC-348-(*) only.
† Used with Radio Receiver BC-224-(*) only.

TABLE OF REPLACEABLE PARTS

MODEL: RADIO RECEIVERS BC-348-(*) AND BC-224-(*)

Reference Symbol	Army Stock Number Navy Stock Number British Ref. Number	Name of Part and Description	Function	Mfr. and Desig. or Standard Type	Cont. or Govt. Dwg. or Spec. No.
114		TRANSFORMER: Osc. Band 4.	Osc. to 1st Det. Coupling		C-204-65-4
115		TRANSFORMER: Osc. Band 5.	Osc. to 1st Det. Coupling		C-204-65-5
116		TARNSFORMER: Osc. Band 6.	Osc. to 1st Det. Coupling		C-204-65-6
117		TRANSFORMER: 1st I-F.	1st Det. to Crystal Coupling	AR	
118		TRANSFORMER: Crystal Filter.	Crystal to 1st I-F Coupling	AR	
119		TRANSFORMER: 2nd I-F.	1st I-F to 2nd I-F Coupling	AR	
120		TRANSFORMER: 3rd I-F.	2nd I-F to 3rd I-F Coupling	AR	
121		TRANSFORMER: C-W Osc.	Grid and Plate Coupling	AR	
122		TRANSFORMER: 4th I-F.	3rd I-F to 2nd Det. Coupling	AR	
123-A		TRANSFORMER: Audio.	Output	CT	D-206-17
123-B	2C4349H/C4	CHOKE: Audio Frequency.	Filter	CT	D-206-17
123-C		CAPACITOR: Paper 400 volts DC .05 mfd ±10%.	C-W Osc. Time Constant	CT	D-206-17
124-1	2C4348H/J1	JACK: Single Circuit.	Headphone	PRM	A-44A-300
124-2		JACK: Single Circuit.	Headphone	PRM	A-44A-300
125	2V991	REGULATOR: Neon Bulb Type RCA 991.	Osc. Plate Voltage Regulator	RCA	
126	2Z5927	LAMP (LM-27): 6 to 8 volts Type 44	Dial Lights	GE	A-46A-314
127	2C4224F/S1	SWITCH: SPST Type.	Crystal Filter (in-out)	AH	A-20C-676
128	2C4224F/S2	SWITCH: DPST Type.	C-W Osc. (on-off)	AH	A-20C-303
129	2C4224F/S3	SWITCH: 3 position, 2 wafers type.	AVC-off-MVC	CRL or OM	B-20D-298
130*	2C4224F/S4	SWITCH: 6 position, 1 wafer.	Band Switch Antenna Unit	CRL or OM	B-20A-611
131*		SWITCH: 6 position, 1 wafer.	Band Switch Antenna Unit	CRL or OM	B-20A-611
130†		SWITCH: 6 position, 1 wafer.	Band Switch Antenna Unit	CRL or OM	B-20A-2733
131†		SWITCH: 6 position, 1 wafer.	Band Switch Antenna Unit	CRL or OM	B-20A-2733

† Used with Radio Receiver BC-224-F, BC-225-K, BC-348-H, BC-348-K and BC-348-L.
* Used with Radio Receiver BC-348-R only.

132*		SWITCH: 6 position, 1 wafer.	Band Switch R-F Unit	CRL or OM	B-20A-585
133-A*		SWITCH: 6 position, 1 wafer.	Band Switch R-F Unit	CRL or OM	B-20A-585
133-B*	2C4224F/S5				
134*		SWITCH: 6 position, 1 wafer.	Band Switch Det. Unit	CRL or OM	B-20A-585
135-A*		SWITCH: 6 position, 1 wafer.	Band Switch Det. Unit	CRL or OM	B-20A-585
135-B*					
132†		SWITCH: 6 position, 1 wafer.	Band Switch R-F Unit	CRL or OM	B-20A-2735
133†		SWITCH: 6 position, 1 wafer.	Band Switch R-F Unit	CRL or OM	B-20A-2735
134†		SWITCH: 6 position, 1 wafer.	Band Switch Det. Unit	CRL or OM	B-20A-2735
135†		SWITCH: 6 position, 1 wafer.	Band Switch Det. Unit	CRL or OM	B-20A-2735
136*		SWITCH: 6 position, 1 wafer.	Band Switch Osc. Unit	CRL or OM	B-20A-537
137*	2C4224F/S6	SWITCH: 6 position, 1 wafer.	Band Switch Osc. Unit	CRL or OM	B-20A-537
138*		SWITCH: 6 position, 1 wafer.	Band Switch Osc. Unit	CRL or OM	B-20A-537
139*		SWITCH: 6 position, 1 wafer.	Band Switch Osc. Unit	CRL or OM	B-20A-537
136†		SWITCH: 6 position, 1 wafer.	Band Switch Osc. Unit	CRL or OM	B-20A-2734
137†		SWITCH: 6 position, 1 wafer.	Band Switch Osc. Unit	CRL or OM	B-20A-2734
138†		SWITCH: 6 position, 1 wafer.	Band Switch Osc. Unit	CRL or OM	B-20A-2734
139†		SWITCH: 6 position, 1 wafer.	Band Switch Osc. Unit	CRL or OM	B-20A-2734
140‡	3Z1935	FUSE: FU-35 5 amp. 25 volt.	Primary Protective	LL	A-46B-315
140**	3Z1923	FUSE: FU-23 10 amp. 25 volt.	Primary Protective	LL	A-46B-315-2
141		CRYSTAL ASSEMBLY: 915 KC Crystal Mounted in Case.	I-F Filter	BE	A-8K-690
142		BINDING POST: Panel.	Antenna Connection	ARH	A-7C-296-2
143		BINDING POST: Panel.	Ground Connection	ARH	A-7C-296-1
201	2C4348H/H1	HANDLE: Panel.	Carrying	NL	A-23A-301
202	2C4348H/L1	LEVER: Control.	AVC-OFF-MVC		A-4B-262
203		KNOB: Control.	Antenna Alignment Cond. Crystal Switch, Dial Lamp Control and Volume Control		A-4B-247

† Used with Radio Receiver BC-348-R only.
* Used with Radio Receiver BC-224-F, BC-224-K, BC-348-H, BC-348-K and BC-348-L.
‡ Used with Radio Receiver BC-348-(*) only.
** Used with Radio Receiver BC-224-(*) only.

TABLE OF REPLACEABLE PARTS

MODEL: RADIO RECEIVERS BC-348-(*) AND BC-224-(*)

Reference Symbol	Army Stock Number Navy Stock Number British Ref. Number	Name of Part and Description	Function	Mfr. and Desig. or Standard Type	Cont. or Govt. Dwg. or Spec. No.
204	2C4348H/K3	KNOB: Control.	C-W Osc. Freq. Control		A-4B-249
205	2C4348H/S7	THUMB SCREWS: Dial Window.	Holds Dial Window		A-3F-291
206	2C4348H/K4	KNOB: Control.	Band Change		A-4B-261
207		KNOB: Control.	Main Tuning Cond.		A-200-25
208		COVER: Panel.	Permits Access to Tube Shelf		A-2E-550
209	2C4348H/S10	SPECIAL SCREW: Shouldered.	Main Tuning Cond.		A-3F-629
210	3H1624F/S1	SPECIAL SCREW: Shouldered Flathead.	Dynamotor Assem. to Mounting Plate		A-3F-378
211	3H1624F/S2	SPECIAL SCREW: Captive.	Dynamotor Assembly		A-3F-369
212	2C4348H/SH	SPECIAL SCREW: Slotted Hex Head.	Dial Assembly to Chassis		A-3F-321
213	2C4348H/S9	SPECIAL SCREW: Shouldered.	Secures Plug to Mounting Plate		A-3F-258
214		COVER: Plate with captive.	Covers Tube in Osc. Unit		A-202-72
215		SHIELD: Tube, Special.	Shield for Tube VT 70		B-202-97
216		FUSE CLIP ASSEMBLY: Laminated Phenolic Strip with Fuse Clips.	Power Fuse	LL	A-201-32-1
217	2C4348H/S17	SOCKET: Tube Octal Type.	For Tubes VT86 and VT152 VT91 and VT65 VT93	NF	A-15C-521
218	2C4348H/S18	SOCKET: Bayonet Type, Special.	For Voltage Regulator Tube	CH	A-27A-528
219	2Z8669	SOCKET: Tube, 7 Prong.	For Tube VT 70	NF	A-15C-639
220*		SOCKET: Tube, 8 prong octal, ceramic.	Tube Socket		A-15A-1040
221	2C4348H/S21	SOCKET: Lamp.	For Dial Lamp	DM	A-47A-402
222	2Z3048	SOCKET SO-104: 8 Pole, Male.	Power Connections		A-201-33
251	2C4348H/T21	1ST I-F TRANSFORMER ASSEMBLY: Complete with Shield Can. Includes 32, 33, 39 and 117.	1st Det. to 1st I-F Coupling	AR	B-13A-679
252	2C4348H/T22	2ND I-F TRANSFORMER ASSEMBLY: Complete with Shield Can. Includes 35-1. 35-2 and 119.	1st I-F to 2nd I-F Coupling	AR	B-13H-681

* Used with Radio Receiver BC-348-R only.

253	2C4348H/T23	3RD I-F TRANSFORMER ASSEMBLY: Complete with Shield Can. Includes 34-2, 34-3 and 120.	2nd I-F to 3rd I-F Coupling	AR	B-13H-682
254	2C4348H/T24	4TH I-F TRANSFORMER ASSEMBLY: Complete with Shield Can. Includes 36, 37-1 and 122.	3rd I-F to 2nd Det. Coupling	AR	B-13B-680
255	2C4348H/F1	CRYSTAL FILTER ASSEMBLY: Complete with Shield Can. Includes 8, 34-1, 118, 127 and 141.	I-F Selectivity	AR	B-13J-685
256	2C4348H/P5	C-W OSC. ASSEMBLY: Complete with Shield Can. Includes 9, 11-12, 35-3, 37-2, 62 and 121.	C-W Reception	AR	B-13D-683
257*	2C4348H/A13	ANTENNA UNIT ASSEMBLY: Complete with Shield Can. Includes 2, 3-1, 3-2, 4-1, 5-1, 5-2, 12-1, 12-2, 15, 21-1, 22-1, 24, 25, 63-1, 72, 90, 92, 93, 94, 95, 96, 130 and 131.	Ant. to 1st R-F Tube Coupling	AR	C-204-13
257†		ANTENNA UNIT ASSEMBLY: Complete with Shield Can. Includes 2, 3-1, 3-2, 4-1, 5-1, 5-2, 12-1, 12-2, 15, 21-1, 22-1, 24, 25, 63-1, 72, 90, 91, 92, 93, 94, 95, 130, 131.	Antenna to 1st R-F Tube Coupling		C-204-13-1
258*	2C4348H/F15	R-F UNIT ASSEMBLY: Complete with Shield Can. Includes 3-3, 3-4, 4-2, 5-3, 5-4, 7-1, 12-3, 13-1, 13-2, 21-2, 22-2, 23-2, 23-3, 26-1, 27-1, 29-1, 30-1, 57-1, 63-2, 91, 96, 98-1, 101, 102, 103, 104, 105, 132 and 133.	1st R-F to 2nd R-F Tube Coupling		C-204-15
258†		R-F UNIT ASSEMBLY: Complete with Shield Can. Includes 3-3, 3-4, 4-2, 5-3, 5-4, 7-1, 12-3, 13-1, 13-2, 21-2, 22-2, 23-2, 23-3, 26-1, 27-1, 29-1, 30-1, 57-1, 63-2, 96, 98-1, 101, 102, 103, 104, 105, 132, 133.	1st R-F to 2nd R-F Tube Coupling		C-204-15-1
259*	2C4348H/D14	DET. UNIT ASSEMBLY: Complete with Shield Can. Includes 3-5, 3-6, 4-3, 5-5, 5-6, 7-2, 12-4, 21-3, 23-1, 23-4, 26-2, 29-2, 27-2, 30-2, 57-2, 97, 98-2, 106, 107, 108, 109, 110, 134, and 135.	2nd R-F to 1st Det. Tube Coupling		C-204-14
259†		DET. UNIT ASSEMBLY: Complete with Shield Can. Includes 3-5, 3-6, 4-3, 5-5, 5-6, 7-2, 12-4, 21-3, 22-3, 23-1, 23-4, 26-2, 29-2, 27-2, 30-2, 57-2, 97, 98-2, 106, 107, 108, 109, 110, 134, 135.	2nd R-F to 1st Det. Tube Coupling		C-204-14-1
260*	2C4348H/P6	OSC. UNIT ASSEMBLY: Complete with Shield Can. Includes 3-7, 3-8, 6-1, 6-2, 6-3, 6-4, 10, 14-1, 14-2, 17-1, 17-2, 18, 19, 20, 28, 40, 41, 42, 43, 44, 45, 46, 47, 56-1, 60, 63-3, 69, 111, 112, 113, 114, 115, 116, 136, 137, 138, 139, 214 and 217.	Heterodyne Osc. to 1st Det. Coupling		C-204-16
260†		OSC. UNIT ASSEMBLY: Complete with Shield Can. Includes 3-7, 3-8, 6-1, 6-2, 6-3, 6-4, 10, 14-1, 14-2, 17-1, 17-2, 18, 19, 20, 28, 40, 41, 42, 43, 44, 45, 46, 47, 56-1, 60, 63-3, 69, 111, 112, 113, 114, 115, 116, 136, 137, 138, 139, 214 and 217.	Heterodyne Osc. to 1st Det. Coupling		C-204-16-2
271		RESISTOR BOARD: 17 Terminal.	Supports Parts 16, 57-6, 59, 63-4, 74 and 75		B-201-58

* Used with Radio Receiver BC-224-F, BC-224-K, BC-348-H, BC-348-K and BC-348-L.
† Used with Radio Receiver BC-348-R only.

TABLE OF REPLACEABLE PARTS

MODEL: RADIO RECEIVERS BC-348-(*) AND BC-224-(*)

Reference Symbol	Army Stock Number Navy Stock Number British Ref. Number	Name of Part and Description	Function	Mfr. and Desig. or Standard Type	Cont. or Govt. Dwg. or Spec. No.
272		RESISTOR BOARD: 14 Terminal.	Supports Parts 11-13, 11-14, 11-15, 11-16, 11-18, 31-1, 31-2, 57-7, 56-2, 61, 64, 66 and 73		B-201-60
273		RESISTOR BOARD: 14 Terminal.	Supports Parts 11-9, 11-10, 11-11, 55-4, 57-4, 57-5 and 65-3		B-201-20
274		RESISTOR BOARD: 32 Terminal.	Supports Parts 11-6, 11-7, 57-3, 58-4, 65-2 and 70		
276		DIAL MECHANISM: Complete with Mask, Index Gear Drive, Stop and Detent Mechanism.	Frequency Indicator Tuning Condenser Drive		D-200-18
300*		DYNAMOTOR DM-24-F or DM-24-K: 13.8 volts, 2.45 amps, 220 volts, .070 amp, 4400 R.P.M.	Motor Generator	E or WC	A-216-348-2
300*		DYNAMOTOR DM-28-H, DM-28-K, DM-28-L or DM-28-R: 27.9 volts, 1.23 amps, 200 volts, .070 amp, 4400 R.P.M.	Motor Generator	E or WC	A-21C-348
301	2C4348H/C1	CHOKE: R-F.	Dynamotor Filter		B-207-41
302	2C4348H/C2	CHOKE: R-F.	Dynamotor Filter	RM	A-207-42
303-A	3DA500-43	CAPACITOR: Paper 250 volts D-C, .5 mfd, ±20%.	Dynamotor Filter	JF	A-8B-383
303-B		CAPACITOR: Paper 250 volts D-C, .5 mfd, ±20%.	Dynamotor Filter	JF	A-8B-383
304‡	3DB1-361	CAPACITOR: Paper 400 volts D-C, 1.0 mfd, ±20%.	Dynamotor Filter	JF	A-8B-361
304**	3DB1.361	CAPACITOR: Paper 400 volts D-C, 0.1 mfd, ±20%.	Dynamotor Filter	JF	A-8B-361
304††	3D	CAPACITOR: Paper 250 volts D-C, 0.01 mfd, ±10%.	Dynamotor Filter		
305-1	BDA10-50	CAPACITOR: Mica 500 volts D-C, .01 mfd, ±10%.	Dynamotor Filter	CD or SM	B-8F-363
305-2		CAPACITOR: Mica 500 volts D-C, .01 mfd, ±10%.	Dynamotor Filter	CD or SM	B-8F-363
306	3H1624H/A1	ARMATURE: Part of Ref. 300.	Dynamotor	E, WC, or RE	A-55A-814
307	3H1624F/B1	BEARING (SET OF 2): Part of Ref. 300.	Dynamotor	E, WC, or RE	A-55A-815
308	3H1624F/B3	BRUSH AND SPRING: Part of Ref. 300.	Pos. High Voltage	E, WC, or RE	A-55A-772
309	3H1624F/B4	BRUSH AND SPRING: Part of Ref. 300.	Neg. High Voltage	E, WC, or RE	A-55A-773
310	3H1624G/B3	BRUSH AND SPRING: Part of Ref. 300.	Pos. Low Voltage	E, WC, or RE	A-55A-770

311	3H1624H/B4	BRUSH AND SPRING: Part of Ref. 300.	Neg. Low Voltage	E, WC, or RE	A-55A-771
315		END BELL: Part of Ref. 300.	Low Voltage End Bearing	E, WC, or RE	A-4A-835
316		END BELL: Part of Ref. 300.	High Voltage End Bearing	E, WC, or RE	A-4A-836
317 318		FIELD WINDINGS: Part of Ref. 300. Field Windings (available in pairs only).	Dynamotor	E, WC, or RE	A-16B-837
319		TIE BARS: Part of Ref. 300.	Holds Items 315 and 316 to Frame	E, WC, or RE	A-3F-838
320		BRUSH CAPS: Part of Ref. 300.	Holds Brushes	E, WC, or RE	A-5B-839
321		GROMMET: Part of Ref. 300.	Protects Terminal Wires	E, WC or RE	A-41B-840
322		GASKET: Part of Ref. 300.	Prevents Leakage of Lubricant	E, WC or RE	A-41A-841
323		PLATE: Part of Ref. 300.	Bearing Retainer	E, WC or RE	A-2E-842
324		COVER: Part of Ref. 300.	Dust Cover	E, WC or RE	A-2E-843
350		BRACKET AND GEAR AND ASSEMBLY: Pair of Beveled Gears and Coupling.	Drives Band Change Switch		A-200-22
351		COUPLING: Flanged Collar with Rectangular Slot.	Coupling Band Change Knob Shaft to Item 350		A-3E-480
352		COUPLING SLIDE: Disk with Two Rectangular Keys.	Slide Between 2 or Item 351		A-3E-288
353		WINDOW FRAME ASSEMBLY: Removable Cast Housing Which Holds Dial Crystal.	Covers Dial Lamps		B-200-24
355		FRICTION SPREADER: Phosphorus Bronze Spring.	Prevents Controls from Turning Under Vibration		A-2J-404
356		JACK COVER ASSEMBLY: Spring Actuated Cover.	Seals Jack Openings	CN	A-23A-636
357		BUSHING: Threaded Bushing.	Holds Handle to Panel and Provides Bearing for Thumb Screw		A-3B-302
358		NUT: Special Locking Nut.	Holds Item 357		A-3G-625
359		THUMB SCREW ASSEMBLY: No. 10-24 x 9 9/32 Inches Long (Less Knob).	Holds Chassis in Cabinet		A-202-28
360		NUT: Special Locking Nut.	Holds Upper End of Handles		A-3G-626
361		FLEXIBLE SHAFT AND COUPLING: 5½ Inches Long, Including Couplings, Special.	Operates B.F.O. Control		A-200-29

* Used with Radio Receiver BC-224-(*) only.
† Used with Radio Receiver BC-348-(*) only.
‡ Used with Radio Receiver BC-224-F, BC-348-H and BC-348-K.
** Used with Radio Receiver BC-224-K only.
†† Used with Radio Receiver BC-348-L and BC-348-R.

TABLE OF REPLACEABLE PARTS

MODEL: RADIO RECEIVERS BC-348-(*) AND BC-224-(*)

Reference Symbol	Army Stock Number Navy Stock Number British Ref. Number	Name of Part and Description	Function	Mfr. and Desig. or Standard Type	Cont. or Govt. Dwg. or Spec. No.
362		EXTENSION SHAFT: Special Shaft 0.594 Inches Long.	Operates Crystal "On-Off" Switch		A-3A-305
363		SHAFT AND COUPLING ASSEMBLY: Flexible Shaft with Insulated Coupling.	Operates Antenna Trimmer		A-200-31
364		SWITCH SHAFT: Flat Shaft.	Operates Band Switch		A-2L-310
366		DIAL MASK ASSEMBLY: Plate with Cutouts.	Mask Undesired Dial Scales		B-200-44
367		DIAL MASK ASSEMBLY: Calibrated Circular Dial with Hub and Large Spur Gear.	Gives Frequency Setting		B-200-45
368		STOP ARM ASSEMBLY: Lever with Roller and Pawl.	Stops Condenser at End of Travel		A-200-46
369		INDEX PLATE: Phosphorus Bronze Strip painted Red.	Dial Scale Index		A-2G-432
370		STOP: Cast Bushing with Key.	Stops Stop Arm		A-4C-433
371		STUD: Shouldered Stud Threaded No. 4-40 One End.	Pivot Pin for Part 368		A-3C-434
372		GUIDE ASSEMBLY: Arm and Roller Assembly.	Engages Index Wheel for Switch Location		A-200-48
373		SPRING: Coiled Spring.	Operation of Indexing Arm Item 372		A-49A-442
374		GEAR AND PINION ASSEMBLY: Spur Gear and Pinion Assembly.	Idler Reduction Gear Between Tuning Shaft and Dial		A-200-50
375		PINION: Pinion (Pinned to Tuning Shaft).	Dial Drive Pinion Meshing with Item 374		A-3J-450
376		WORM: Worm, Single Pitch.	Drives Cross Shaft of Condenser Drive		A-3L-456
377		GEAR ASSEMBLY: Split Worm Wheel.	Part of Condenser Drive Train		A-200-51
378		PINION AND BUSHING ASSEMBLY: Pinion on Cross Shaft.	Drives Tuning Condenser Gear		A-200-54
379		SPRING: Torsion Spring.	Holds Item 368		A-49A-460
380		"C" WASHER: "C" Washer.	Against Dial Used to Retain Items 372 and 374		A-29C-474
399		FT-154-H, T, L, K: Mounting Base Assembly.	Supports Receiver		B-202-6

400		MOUNTING PLATE ASSEMBLY: Part of Reference 399.	Supports Item 401		B-202-7
401		BASE AND STIFFENER ASSEMBLY: Part of Reference 399.	Supports Receiver and Plug —Item 403 or 404		B-202-8
402		CAP SCREW: ¼—20 x 11¹⁄₁₆ Long.	Holds Items 400 and 401 Together		B-3F-278
403		FITTING: 8 Pole Female Power Connector PL-P103.	Makes Connection to Exterior Equipment		SC-D-2131B SC-D-2129-B
404		FITTING: 8 Pole Female Power Connector PL-Q103.	Makes Connection to Exterior Equipment		SC-D-2128B SC-D-2129B
405		JACK BLOCK: Part of Reference 403 and 404, Numbered 1 and 5.	Holds Contactors		B-5F-391-1
406		JACK BLOCK: Part of Reference 403 and 404, Numbered 2 and 6.	Holds Contactors		B-5F-391-2
407		JACK BLOCK: Part of Reference 403 and 404, Numbered 3 and 7.	Holds Contactors		B-5F-391-3
408		JACK BLOCK: Part of Reference 403 and 404, Numbered 4 and 8.	Holds Contactors		B-5F-391-4
409		JACK HOUSING ASSEMBLY: Part of Reference 403 and 404.	Houses Jack Blocks		B-202-2
410		FITTING (RIGHT ANGLE): Part of Reference 404.	Cable Protection and Shielding		B-4E-245
411		FITTING (STRAIGHT): Part of Reference 403.	Cable Protection and Shielding		B-4E-533
412		CONTACT SPRING ASSEMBLY: Part of Reference 403 and 404.	Contact		A-201-5
413		JACK HOUSING COVER: Part of Reference 403 and 404.	Covers Jack Block Terminals		A-202-3
414		COVER: Part of Reference 257.	Top		A-2E-574
415		COVER: Part of Reference 257.	Bottom		A-2E-575
416		SHIELD: Part of Reference 257.	Side and Ends		C-2H-608
417		COVER: Part of Reference 258.	Top		A-2E-573
418		COVER: Part of Reference 258.	Bottom		A-2E-575
419		SHIELD: Part of Reference 258.	Side and Ends		C-2H-568-1
420		COVER: Part of Reference 259.	Top		A-2E-573
421		COVER: Part of Reference 259.	Bottom		A-2E-575
422		SHIELD: Part of Reference 259.	Side and Ends		C-2H-568-2

TABLE OF REPLACEABLE PARTS

MODEL: RADIO RECEIVERS BC-348-(*) AND BC-224-(*)

Reference Symbol	*Army Stock Number Navy Stock Number British Ref. Number*	*Name of Part and Description*	*Function*	*Mfr. and Desig. or Standard Type*	*Cont. or Govt. Dwg. or Spec. No.*
423		COVER: Part of Reference 260.	Top		A-2E-549
424		COVER: Part of Reference 260.	Bottom		A-2E-547
425		COVER: Part of Reference 260.	Side		C-202-71
426		SHIELD: Part of Reference 260.	Side and Ends		C-2H-534
433		TUBE GUIDE: Cylindrical Socket for Tube Base.	Supports Tube and Tube Shield VT 70		A-202-98
435		SHIELD CAN: Part of Reference 251.	1st I-F Transformer Assembly Shield	AR	A-208-125
436		SHIELD CAN: Part of Reference 252.	2nd I-F Transformer Assembly Shield	AR	A-208-126
437		SHIELD CAN: Part of Reference 253.	3rd I-F Transformer Assembly Shield	AR	A-208-126
438		SHIELD CAN: Part of Reference 254.	4th I-F Transformer Assembly Shield	AR	A-208-125
439		SHIELD CAN: Part of Reference 255.	Crystal Filter Assembly Shield	AR	A-208-128
440		SHIELD CAN: Part of Reference 256.	C-W Oscillator Assembly	AR	A-208-127
	2J6K7	VACUUM TUBE: JAN 6K7 (VT-86).	1st R-F Amplifier		
	2J6K7	VACUUM TUBE: JAN 6K7 (VT-86).	2nd R-F Amplifier		
	2J6J7	VACUUM TUBE: JAN 6J7 (VT-91).	1st Detector		
	2J6C5	VACUUM TUBE: JAN 6C5 (VT-65).	Heterodyne Oscillator		
	2J6K7	VACUUM TUBE: JAN 6K7 (VT-86).	1st I-F Amplifier		
	2J6F7	VACUUM TUBE: JAN 6F7 (VT-70).	2nd I-F Amplifier, CW Oscillator		
	2J6B8	VACUUM TUBE: JAN 6B8 (VT-93).	3rd I-F Amplifier, 2nd Detector, AVC		
	2J6K6	VACUUM TUBE: JAN 6K6 (VT-152).	Output Amplifier		
	2J991	TUBE: Type JAN 991.	Voltage Regulator		

SECTION VIII

DRAWINGS

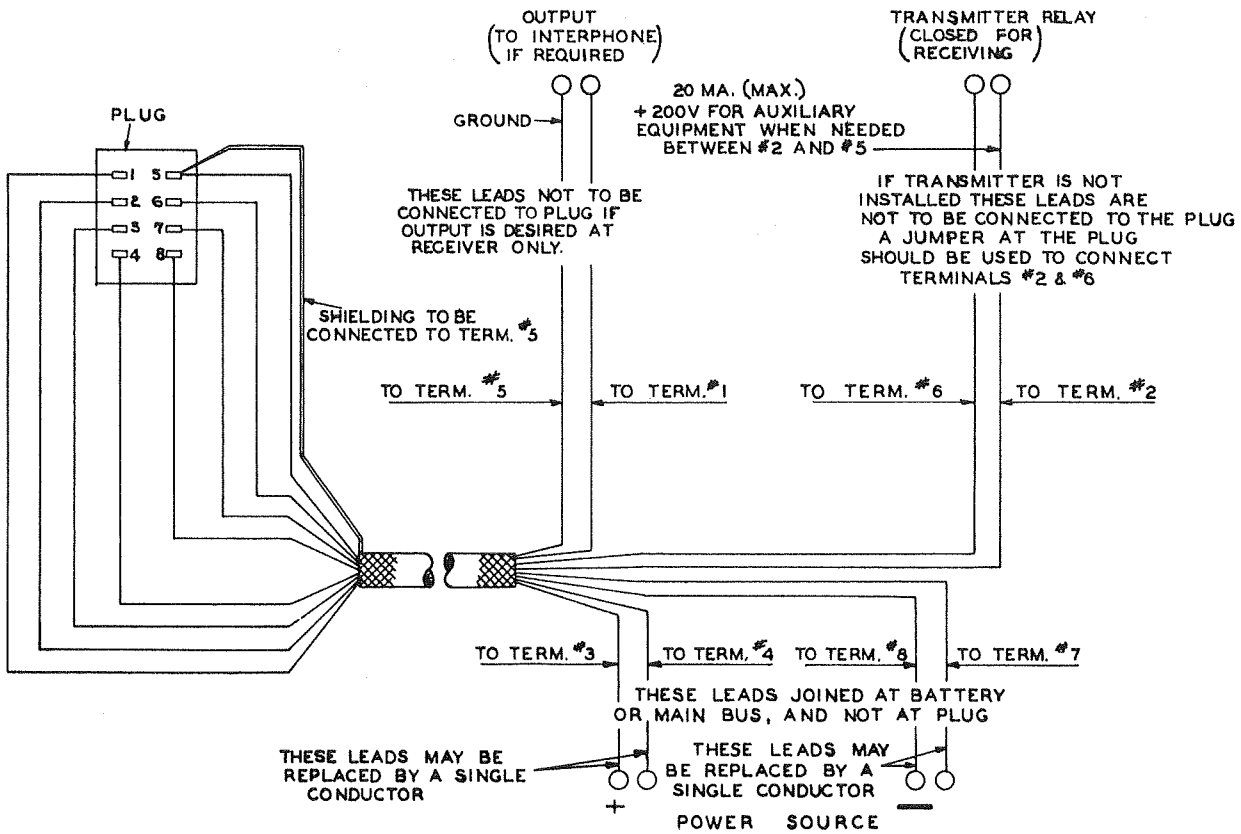

Figure 8–1. Plug Connections

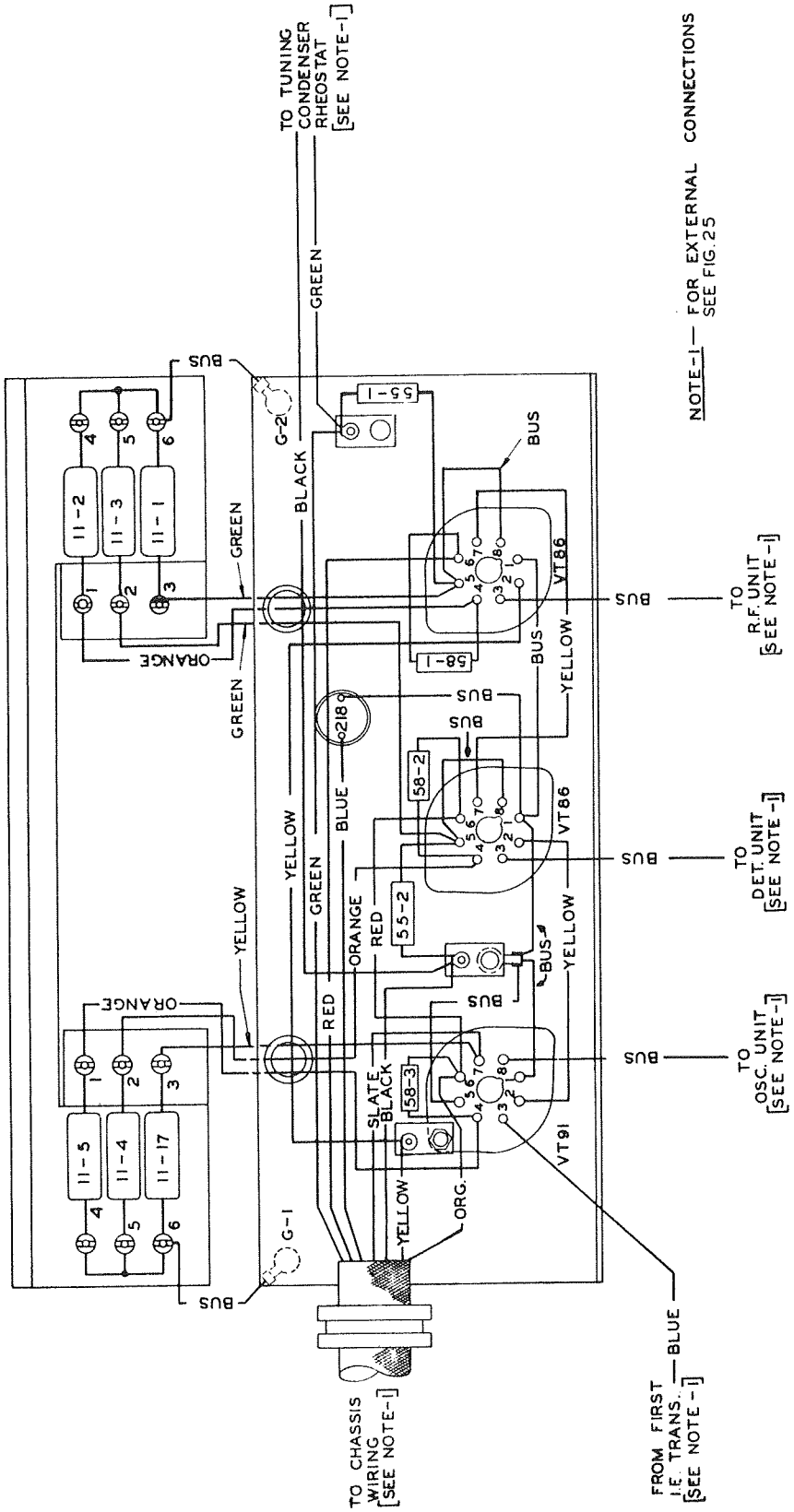

Figure 8–2. Radio Receiver BC-348-(*) or BC-224-(*)—Wiring Diagram, Tube Shelf

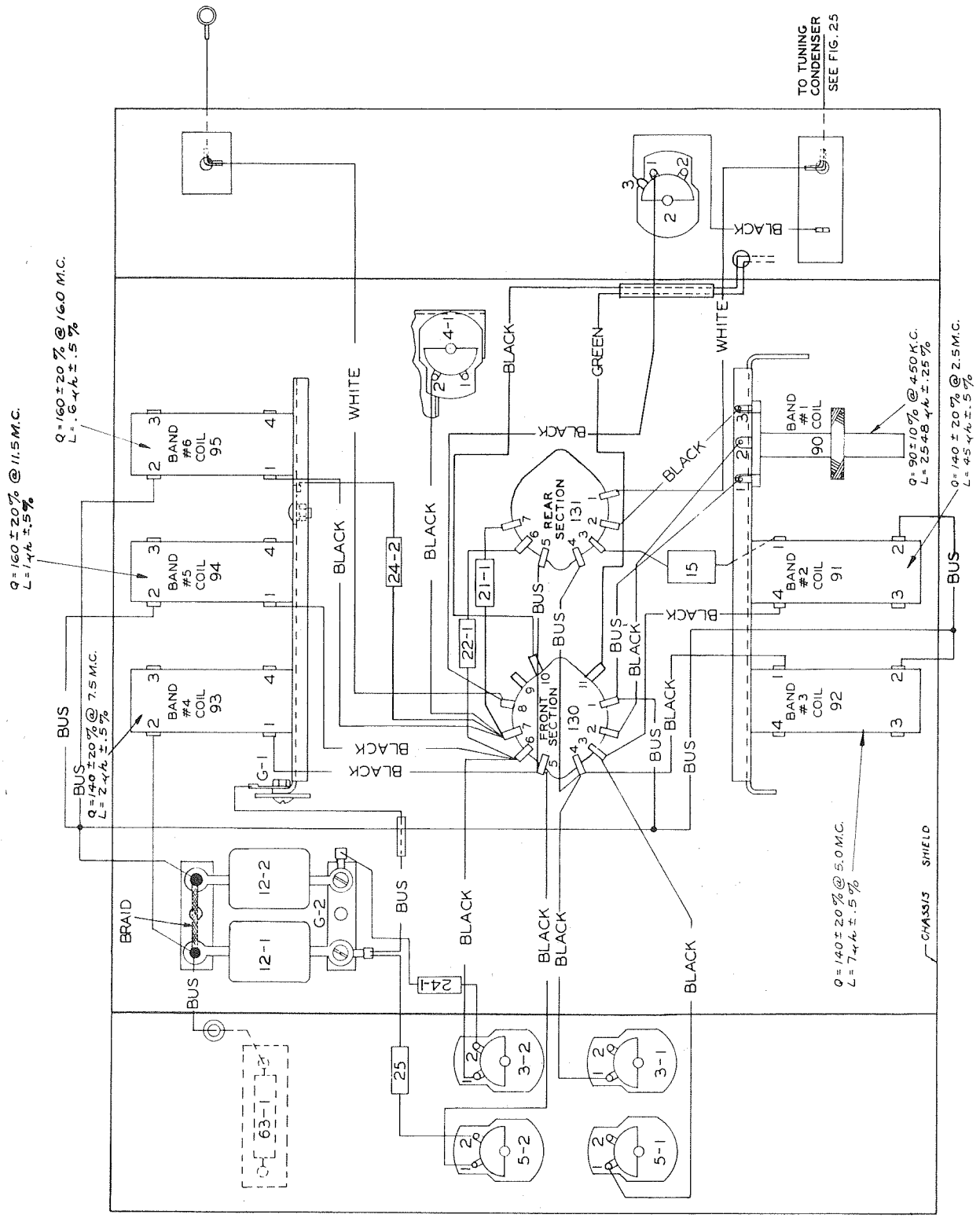

Figure 8–3. Radio Receiver BC-348-(*) or BC-224-(*)—Wiring Diagram, Antenna Unit (does not include Radio Receiver BC-348-R)

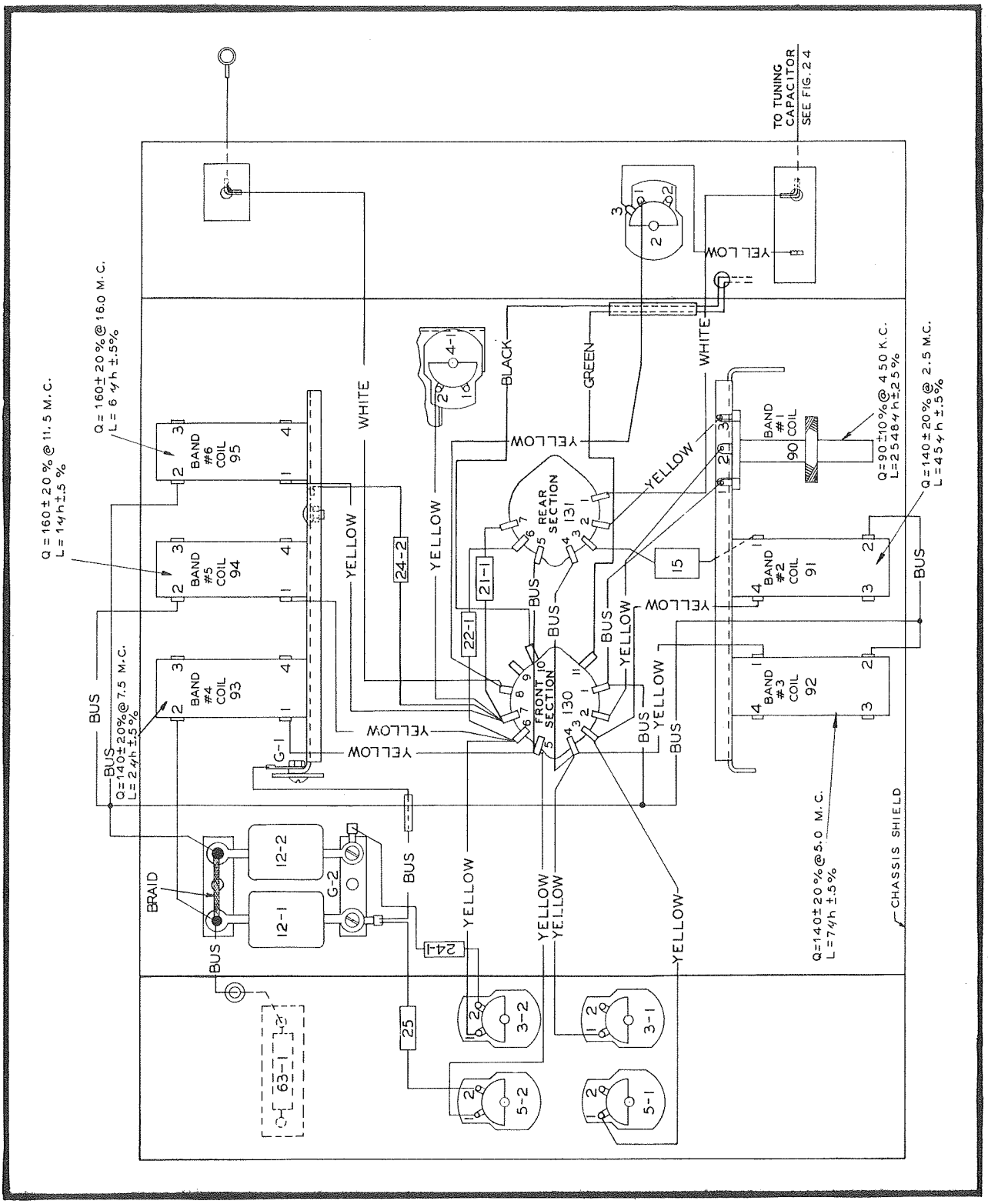

Figure 8–4. Radio Receiver BC-348-R—Wiring Diagram, Antenna Unit

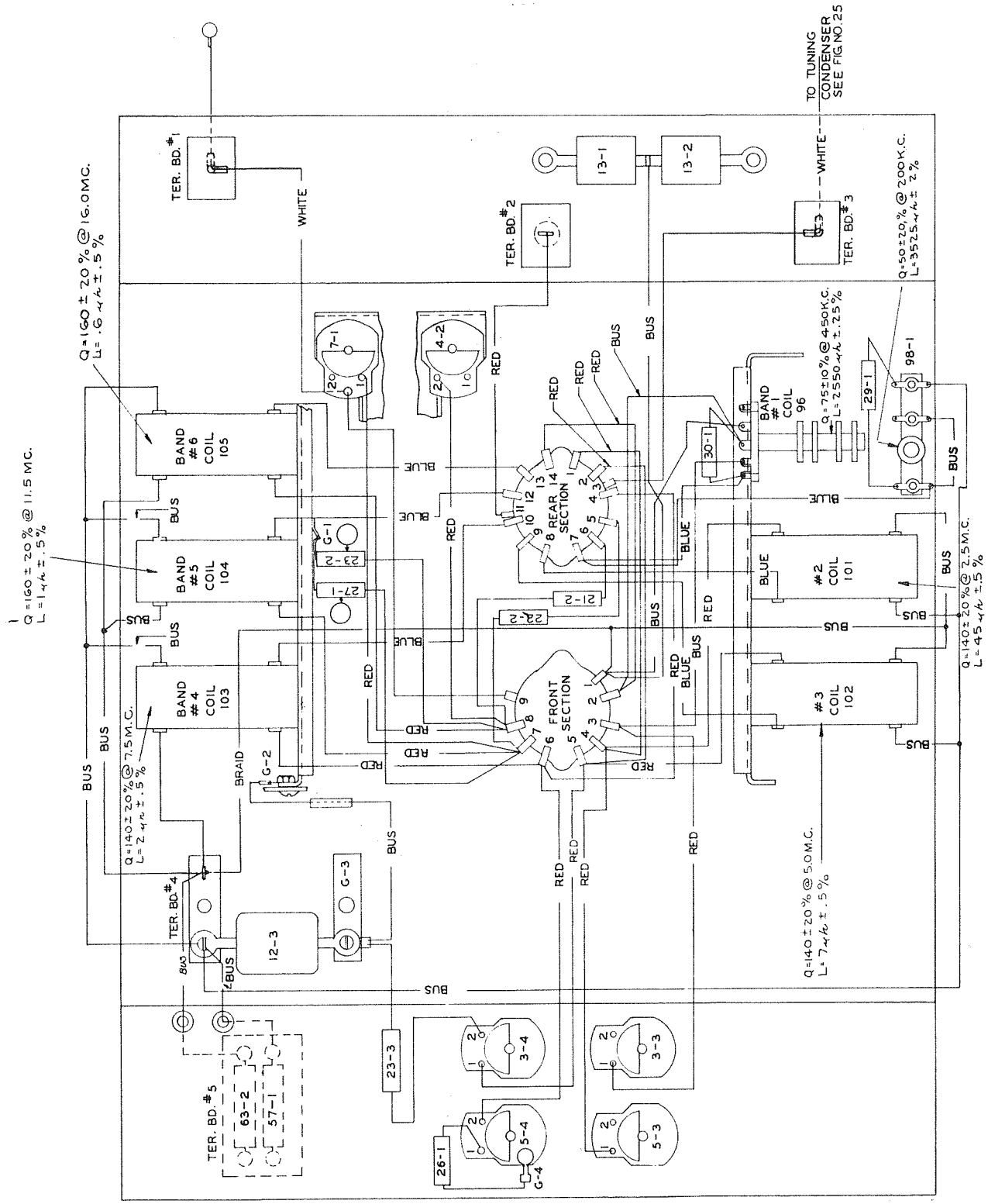

Figure 8–5. Radio Receiver BC-348-(*) or BC-224-(*)—Wiring Diagram, R-F Unit

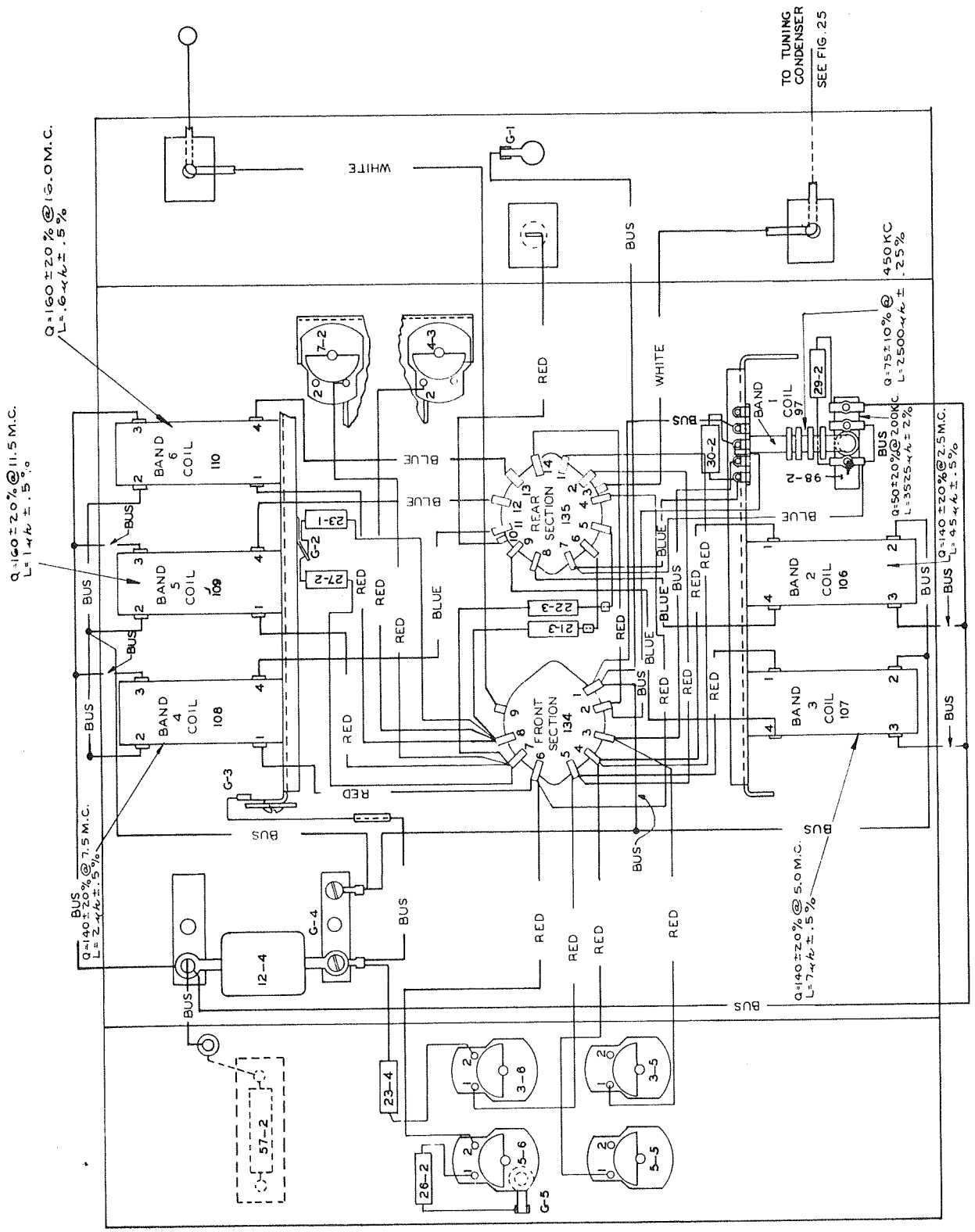

Figure 8–6. Radio Receiver BC-348-(*) or BC-224-(*)—Wiring Diagram, Detector Unit

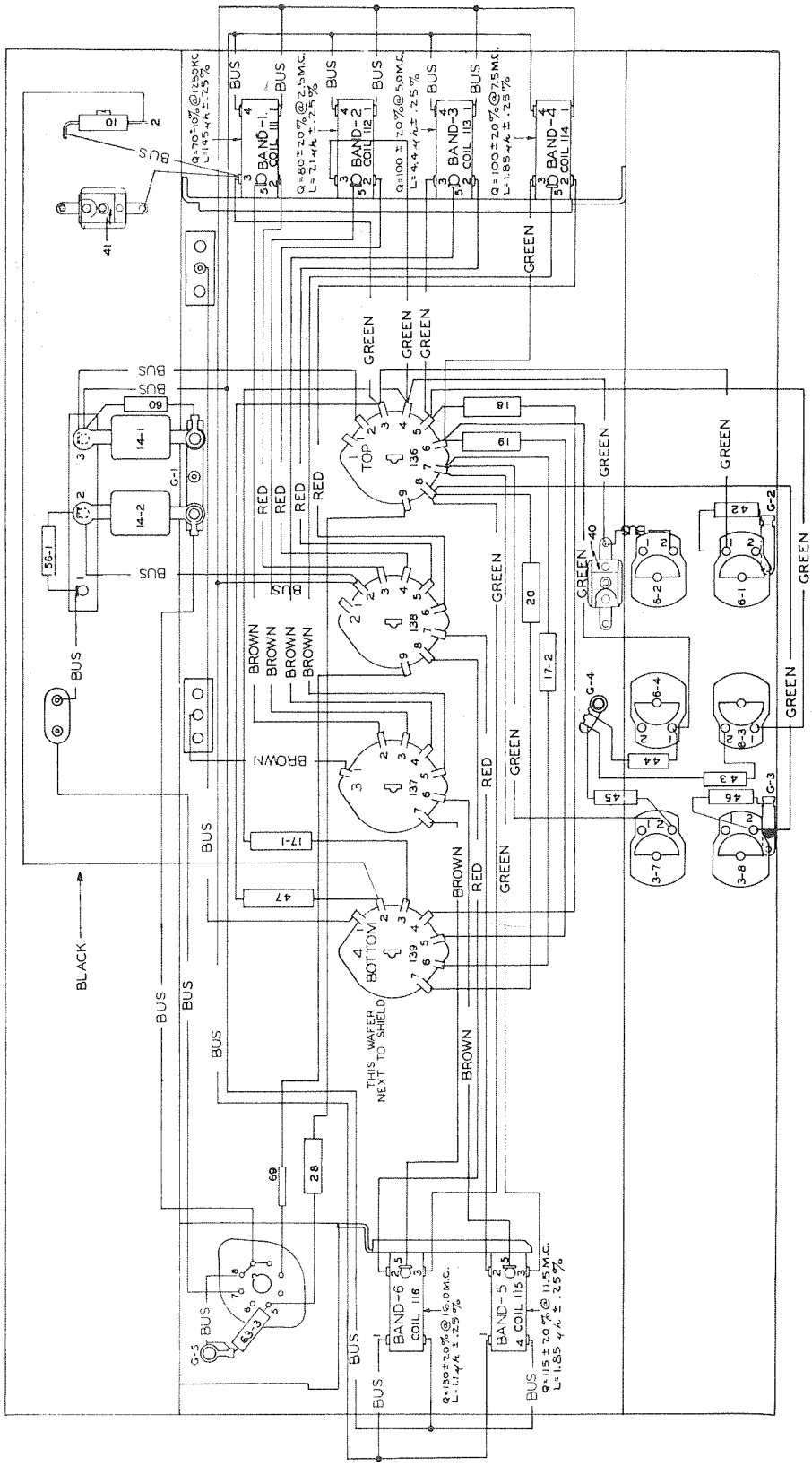

Figure 8–7. Radio Receiver BC-348-(*) or BC-224-(*)—Wiring Diagram, Oscillator Unit

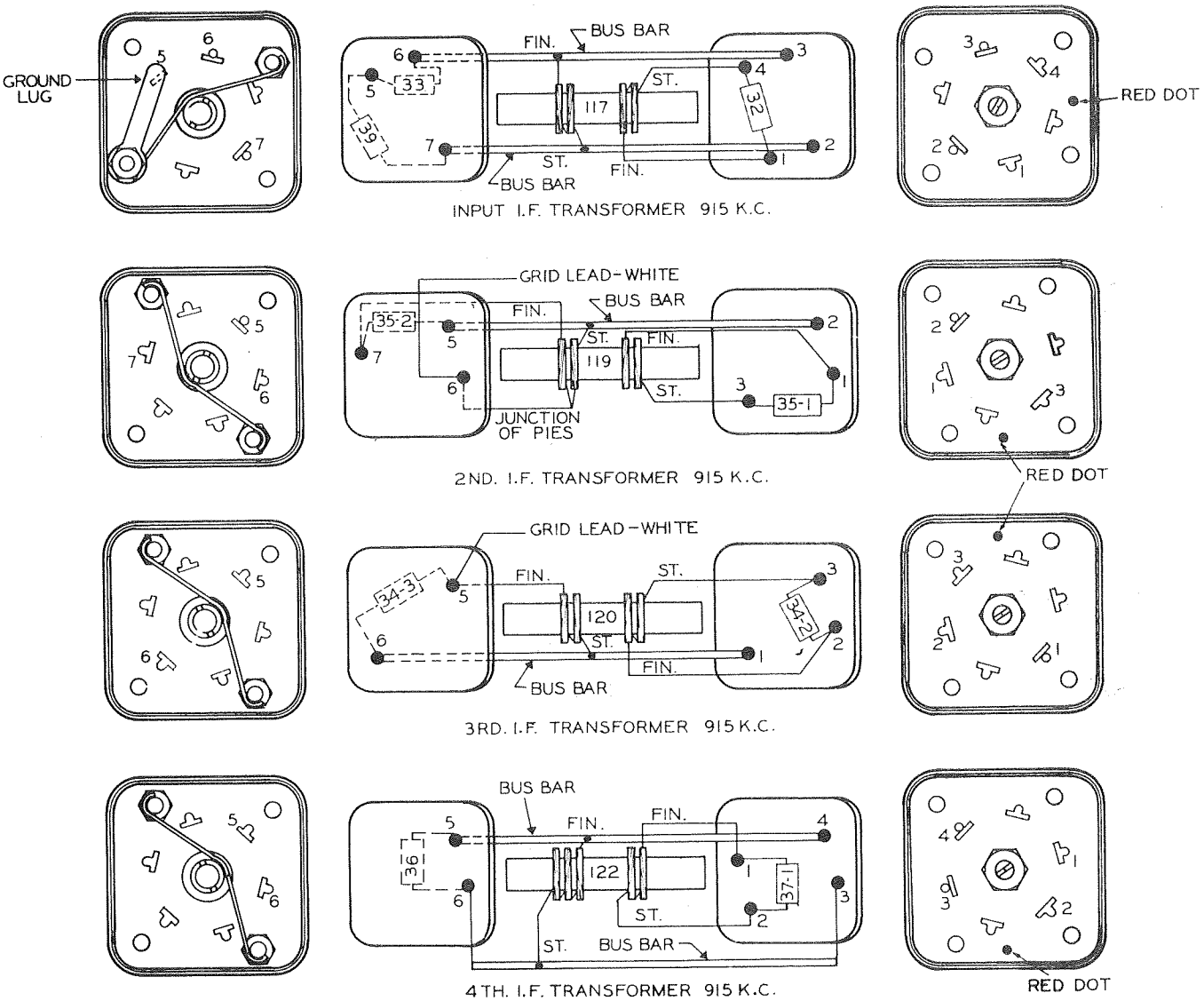

Figure 8–8. Radio Receiver BC-348-(*) or BC-224-(*)—Wiring Diagram, I-F Transformers

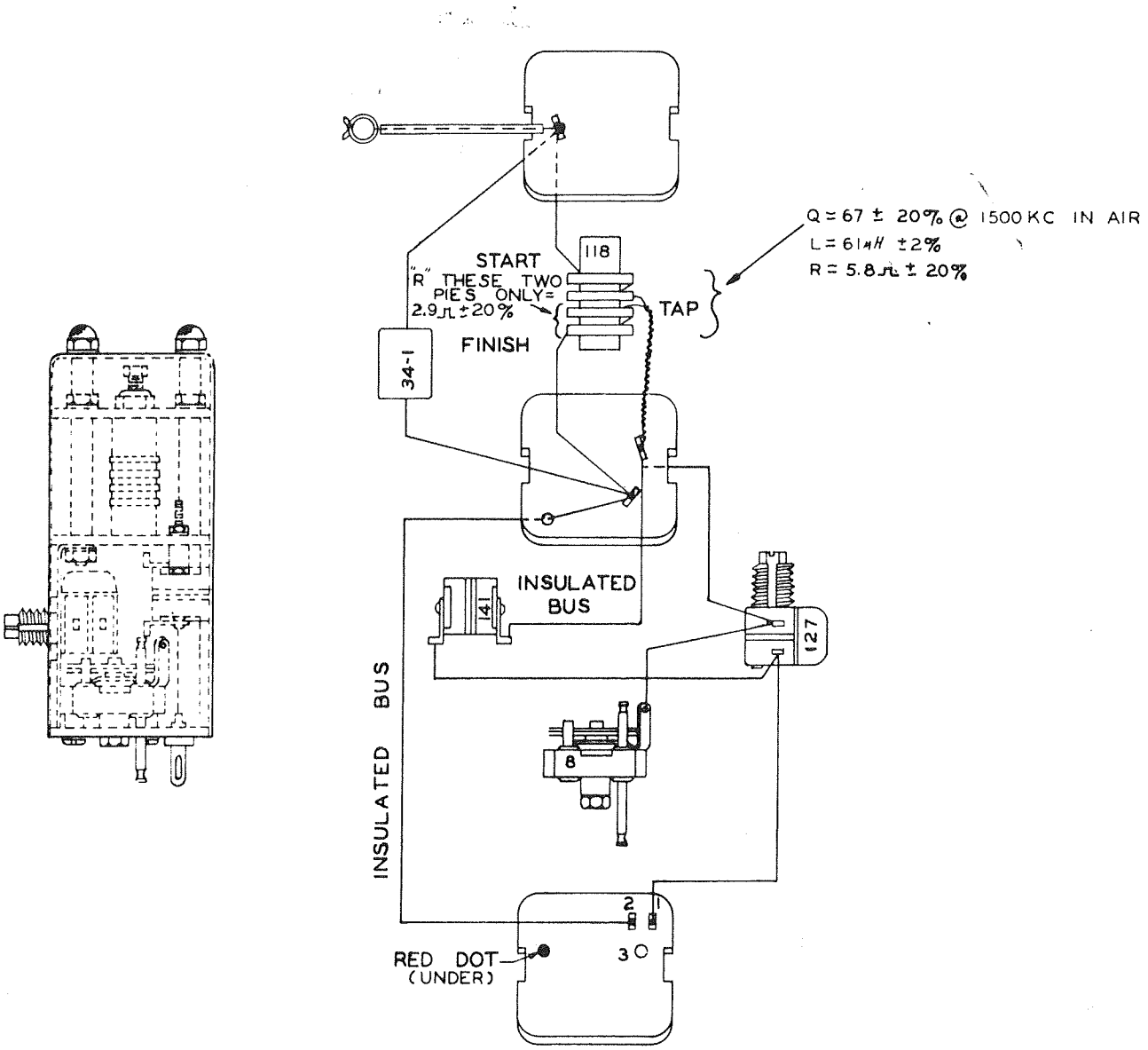

Figure 8–9. Radio Receiver BC-348-(*) or BC-224-(*)—Wiring Diagram, Crystal Filter

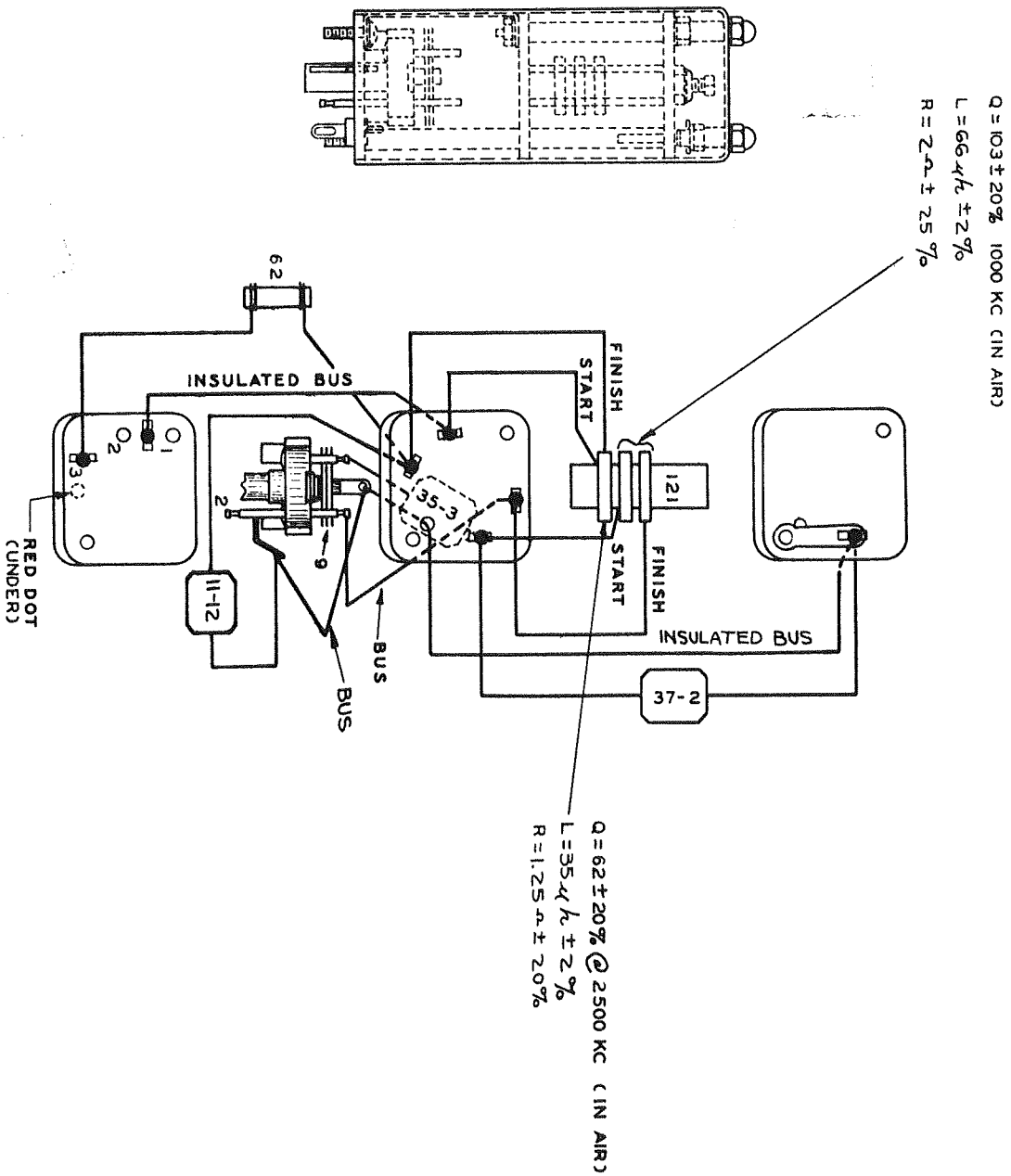

Figure 8–10. Radio Receiver BC-348-(*) or BC-224-(*)—Wiring Diagram, Beat Frequency Oscillator

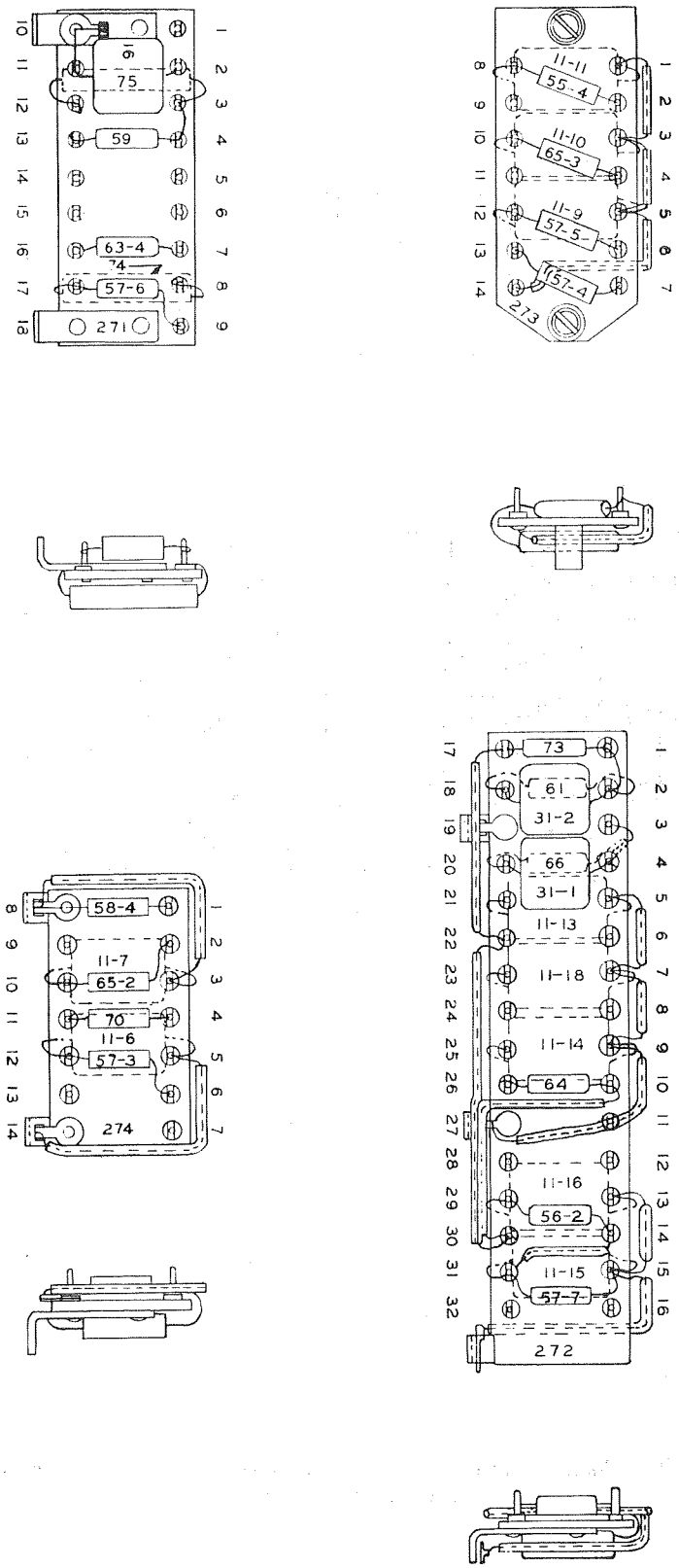

Figure 8–11. Radio Receiver BC-348-(*) or BC-224-(*)—Wiring Diagram, Resistor Boards

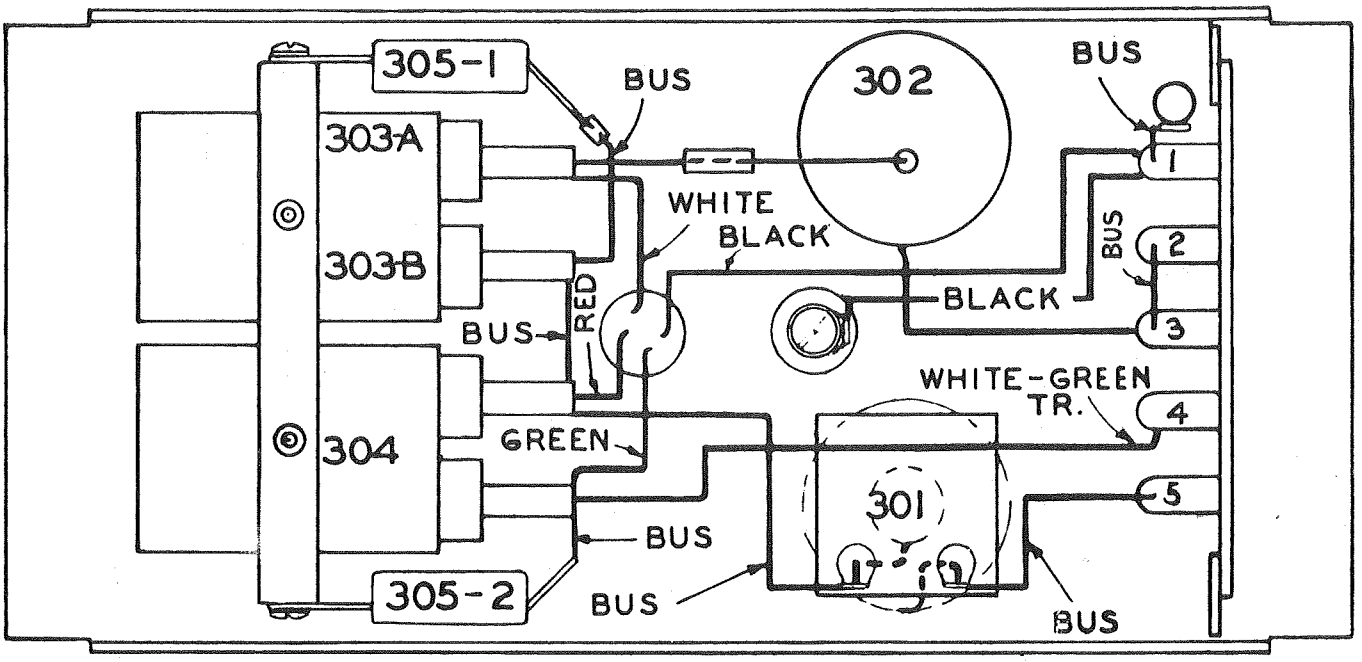

Figure 8–12. Radio Receiver BC-348-(*) or BC-224-(*)—Wiring Diagram, Dynamotor Assembly

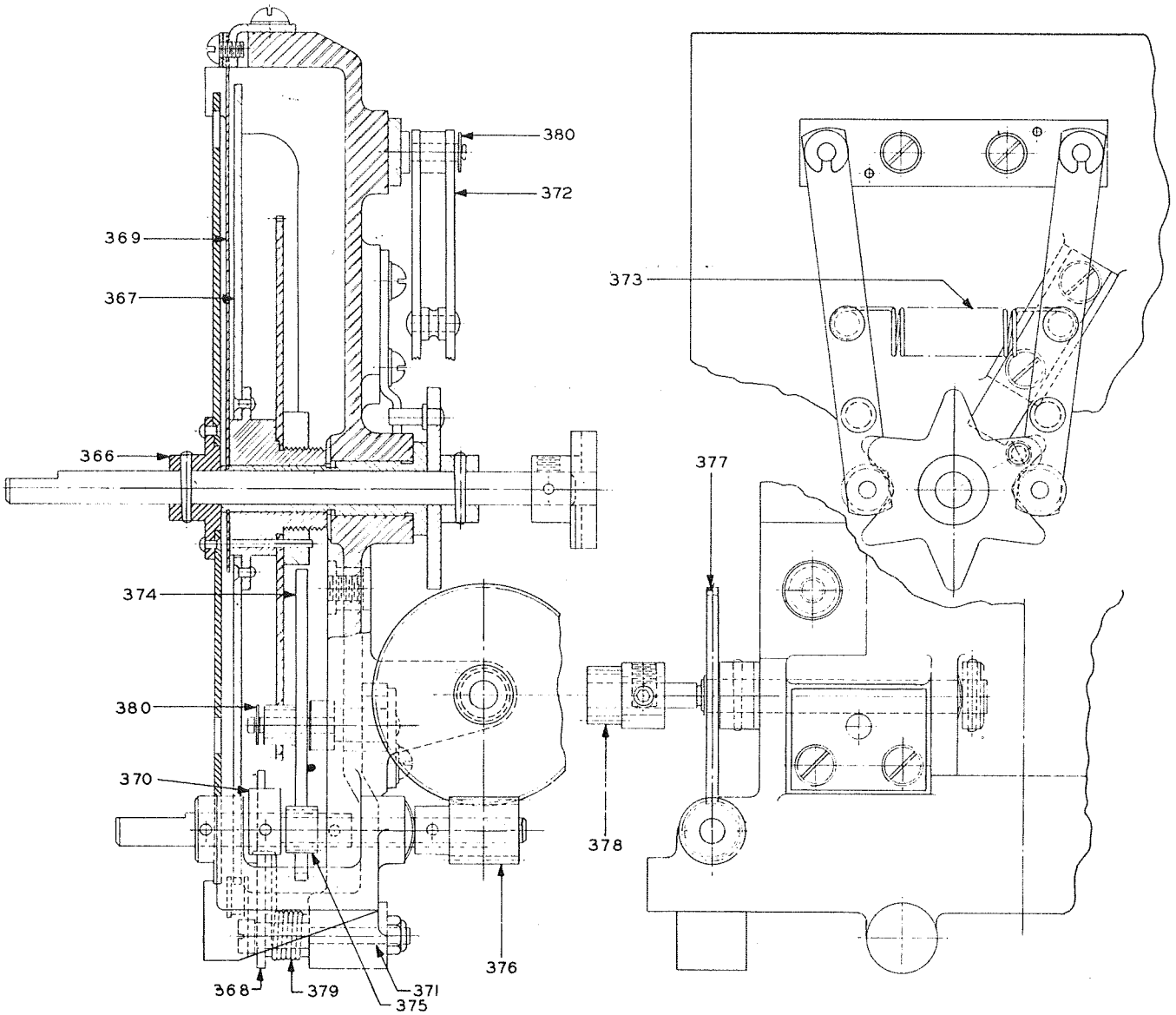

Figure 8–13. Radio Receiver BC-348-(*) or BC-224-(*)—Dial and Mask Assembly

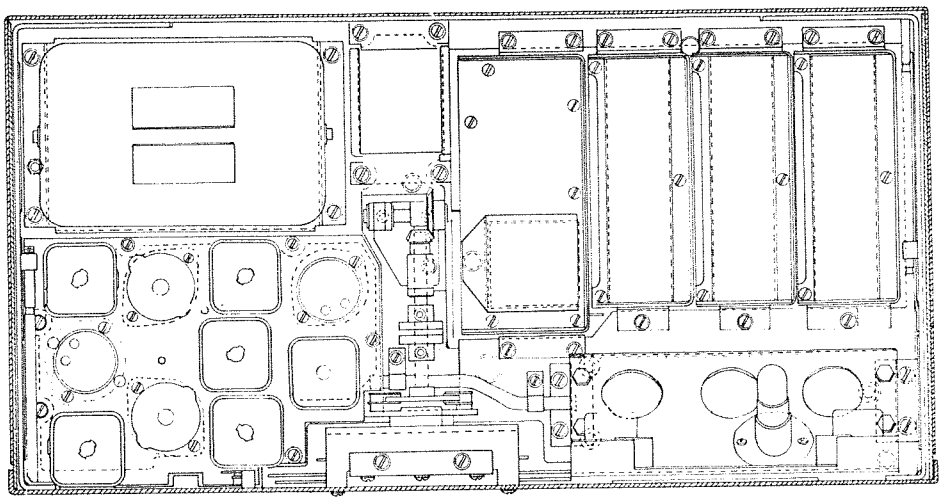

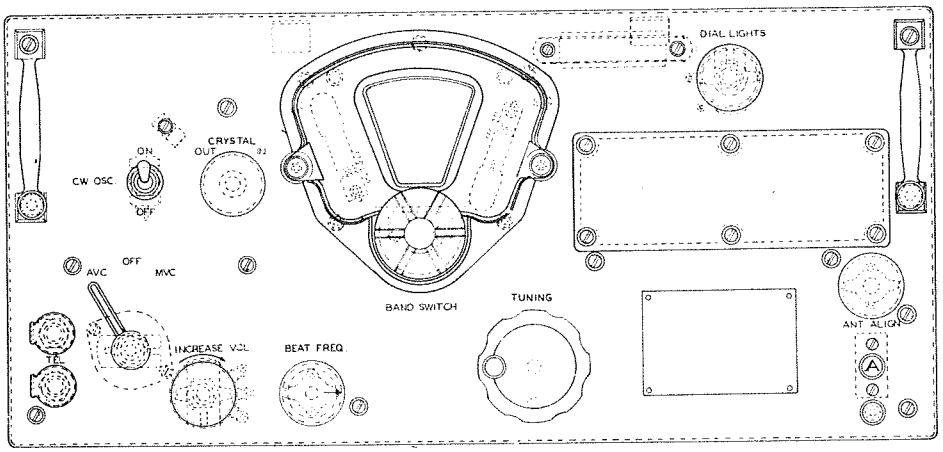

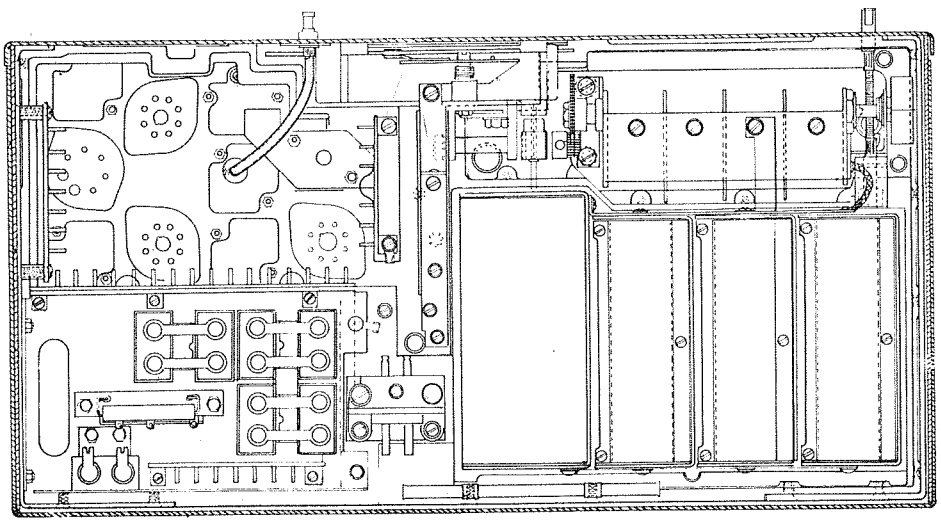

Figure 8–14. Radio Receiver BC-348-(*) or BC-224-(*)—General View of Receiver

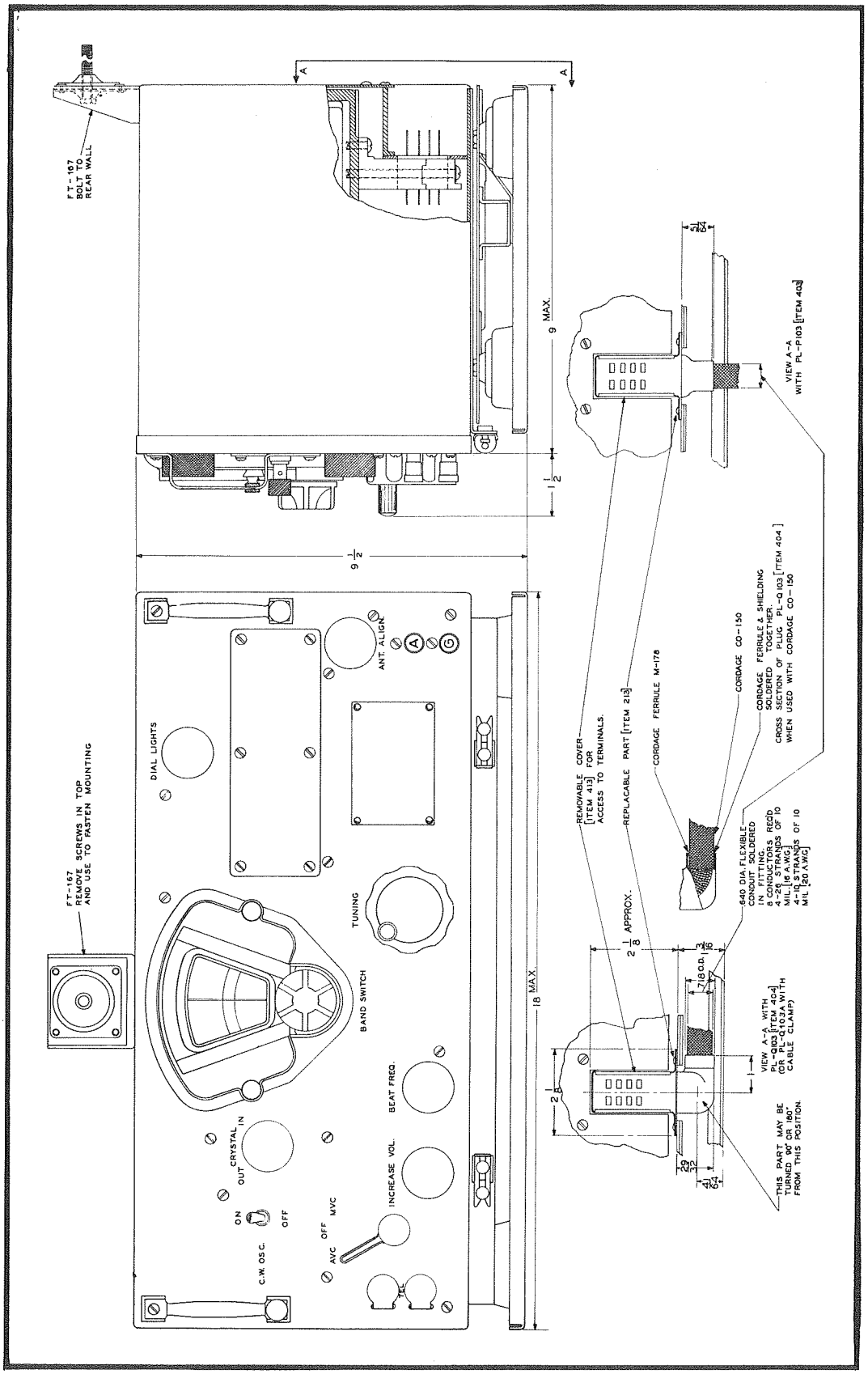

Figure 8–15. Radio Receiver BC-348-(*) or BC-224-(*)—Outline Dimensional Drawing

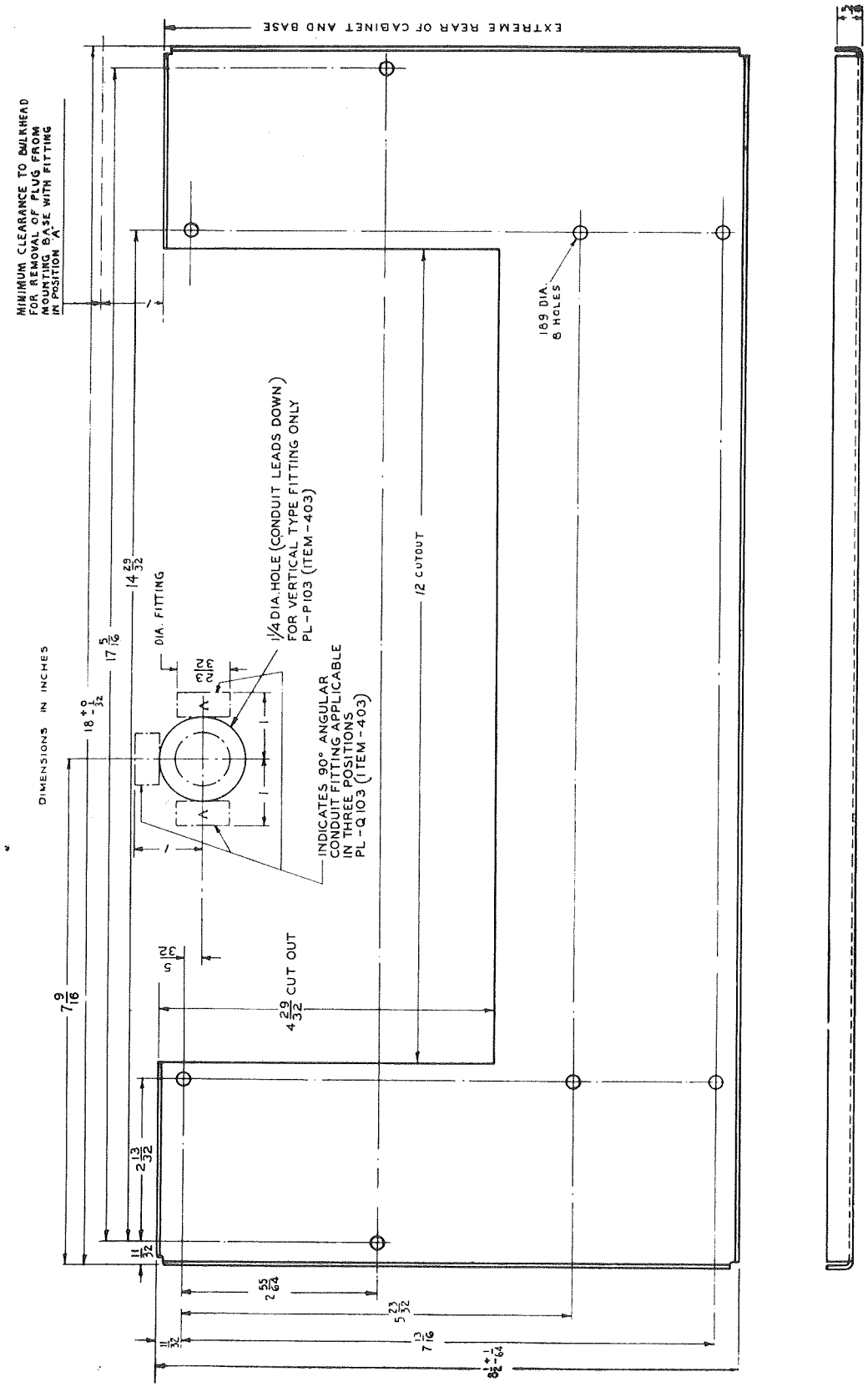

Figure 8–16. Radio Receiver BC-348-(*) or BC-224-(*)—Drilling Plan

Reference Symbol	Value	Reference Symbol	Value	Reference Symbol	Value	Reference Symbol	Value
1A	16–241	13–1	10,000	37–1	150	61	56,000
1B	16–241	13–2	10,000	37–2	150		
1C	16–241					62	68,000
1D	16–241	14–1	10,000	38	75		
		14–2	10,000			63–1	100,000
2	75			39	750	63–2	100,000
		15	10,000			63–3	100,000
3–1	50			40	4.8*	63–4	100,000
3–2	50	16	5,000				
3–3	50			41	3.5*		
3–4	50	17–1	500			64	180,000
3–5	50	17–2	500	42	20		
3–6	50					65–1	470,000
3–7	50	18	1,700	43	65	65–2	470,000
3–8	50					65–3	470,000
		19	2,650	44	90	65–4	470,000
4–1	50						
4–2	50	20	210	45	35		
4–3	50					66	560,000
		21–1	200	46	40		
5–1	25	21–2	200				
5–2	25	21–3	200	47	85	67	1.5 megohms
5–3	25						
5–4	25	22–1	400	48–1A	500,000	68	220,000
5–5	25	22–2	400	48–1B	500,000		
5–6	25	22–3	400			69	75
				48–2A	500,000		
6–1	25	23–1	40	48–2B	500,000	70	47,000
6–2	25	23–2	40				
6–3	25	23–3	40	48–3A	500,000	73	2,400
6–4	25	23–4	40	48–3B	500,000		
						74	10,000
7–1	25	24–1	25	49–1A	500,000		
7–2	25	24–2	25	49–1B	500,000	75	27,000
				49–2A	500,000		
8	10	25	65	49–3B	500,000	76	0.5**
		26–1	95	49–3A	500,000	76–A	3†
9	10	26–2	95	49–3B	500,000	76–B	190†
		27–1	70	49–4A	500,000	77	68**
10	5–30	27–2	70	49–4B	500,000		
						77	60†
11–1	10,000	28	100	55–1	470		
11–2	10,000			55–2	470	78	10–3,500
11–3	10,000	29–1	1,250	55–3	470		
11–4	10,000	29–2	1,250	55–4	470	79–A	10–20,000
11–5	10,000					79–B	50–350,000
11–6	10,000	30–1	2	56–1	1,000		
11–7	10,000	30–2	2	56–2	1,000	80	75**
11–8	10,000						
11–9	10,000	30–1	1,500	57–1	4,700	80	200†
11–10	10,000	31–2	1,500	57–2	4,700		
11–11	10,000			57–3	4,700	140	10 amperes, 25 volts**
11–12	10,000	32	200	57–4	4,700		
11–13	10,000			57–5	4,700		
11–14	10,000	33	300	57–6	4,700	140	5 amperes, 25 volts†
11–15	10,000			57–7	4,700		
11–16	10,000	34–1	260				
11–17	10,000	34–2	260	58–1	10,000	303–A	500,000
11–18	10,000	34–3	260	58–2	10,000	303–B	500,000
				58–3	10,000		
12–1	10,000	35–1	240	58–4	10,000	304	10,000*
12–2	10,000	35–2	240				
12–3	10,000	33–3	240	59	12,000	305–1	10,000
12–4	10,000	35–4	240			305–2	10,000
		36	47	60	15,000		

* Applies to Radio Receiver BC-348-L only. Refer to Table of Replaceable Parts for values for other models.

** Used with Radio Receiver BC-224–(*) only.
† Used with Radio Receiver BC-348–(*) only.

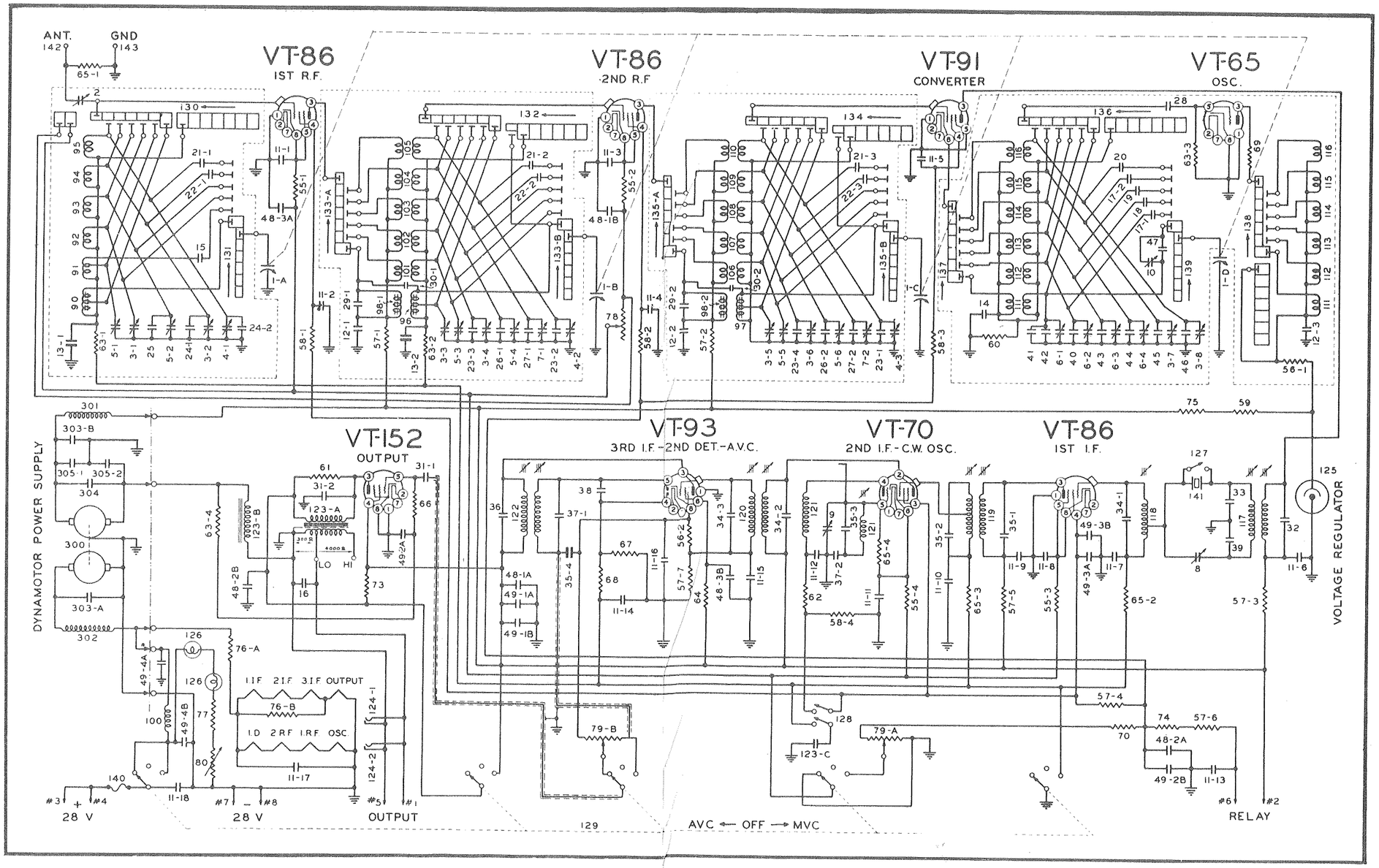

Figure 8–18. Radio Receiver BC-348-(*) or BC-224-(*) —Schematic Circuit Diagram

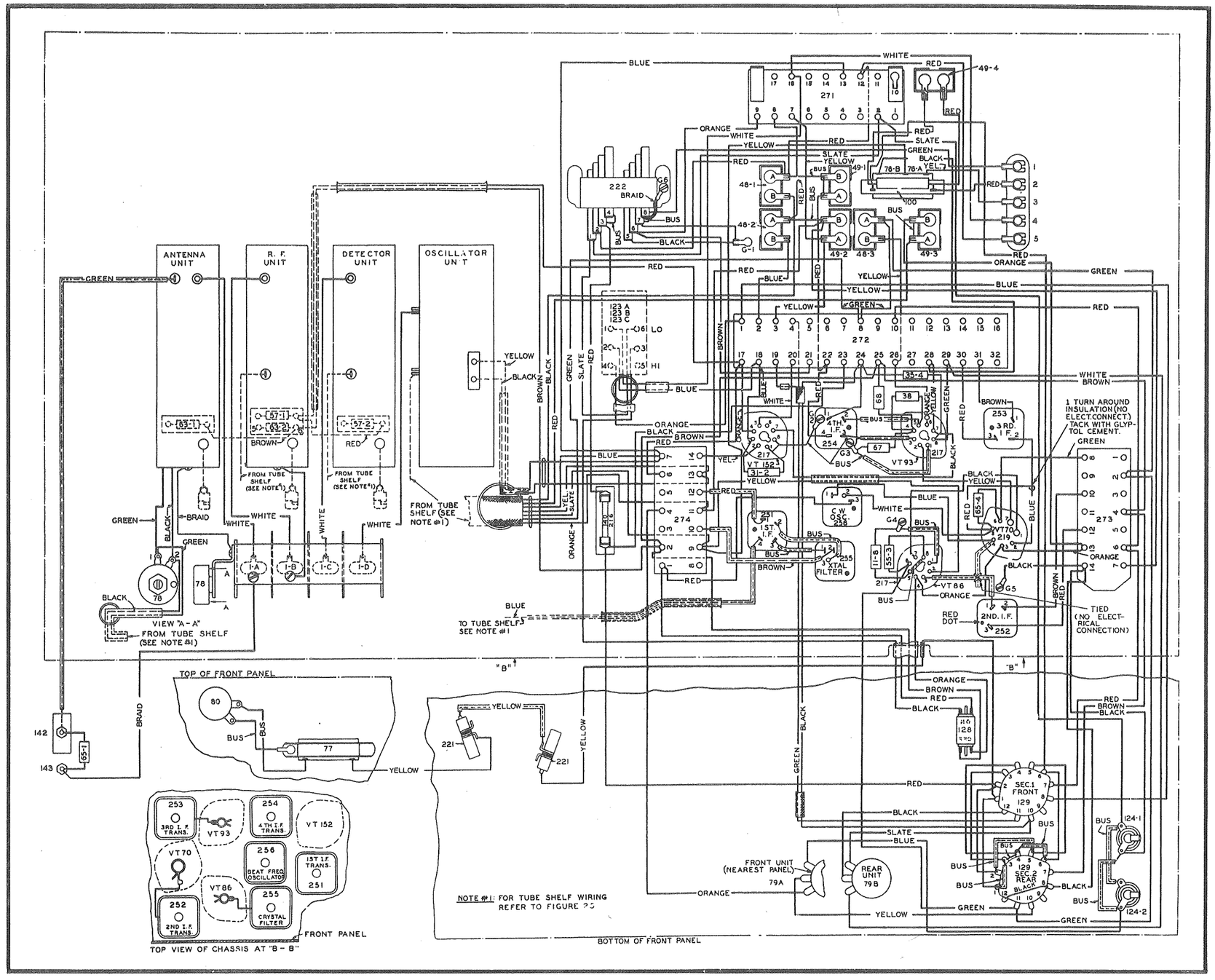

Figure 8–17. Radio Receiver BC-348-(*) or BC-224-(*) —Wiring Diagram

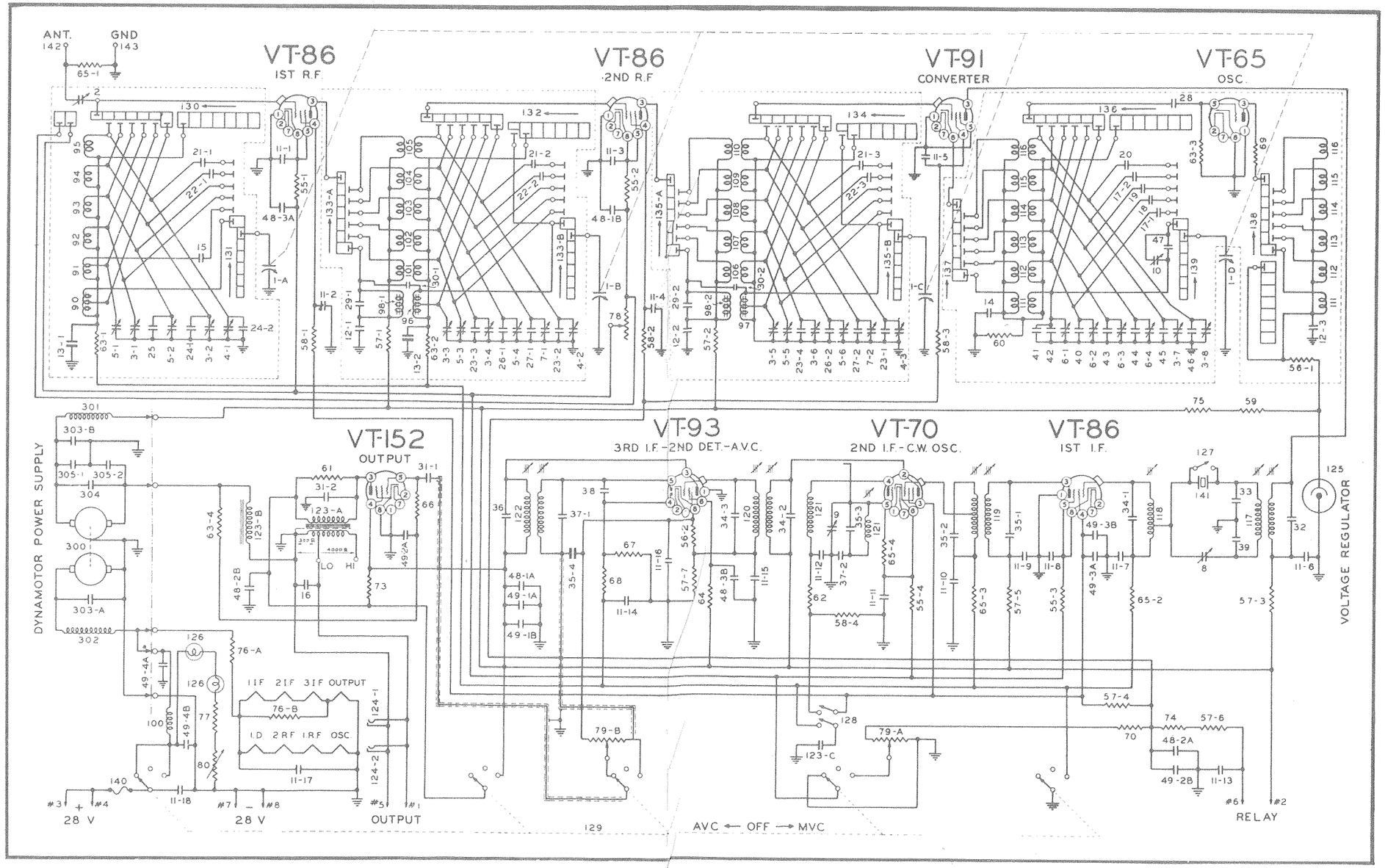

Figure 8–18. Radio Receiver BC-348-(*) or BC-224-(*) —Schematic Circuit Diagram

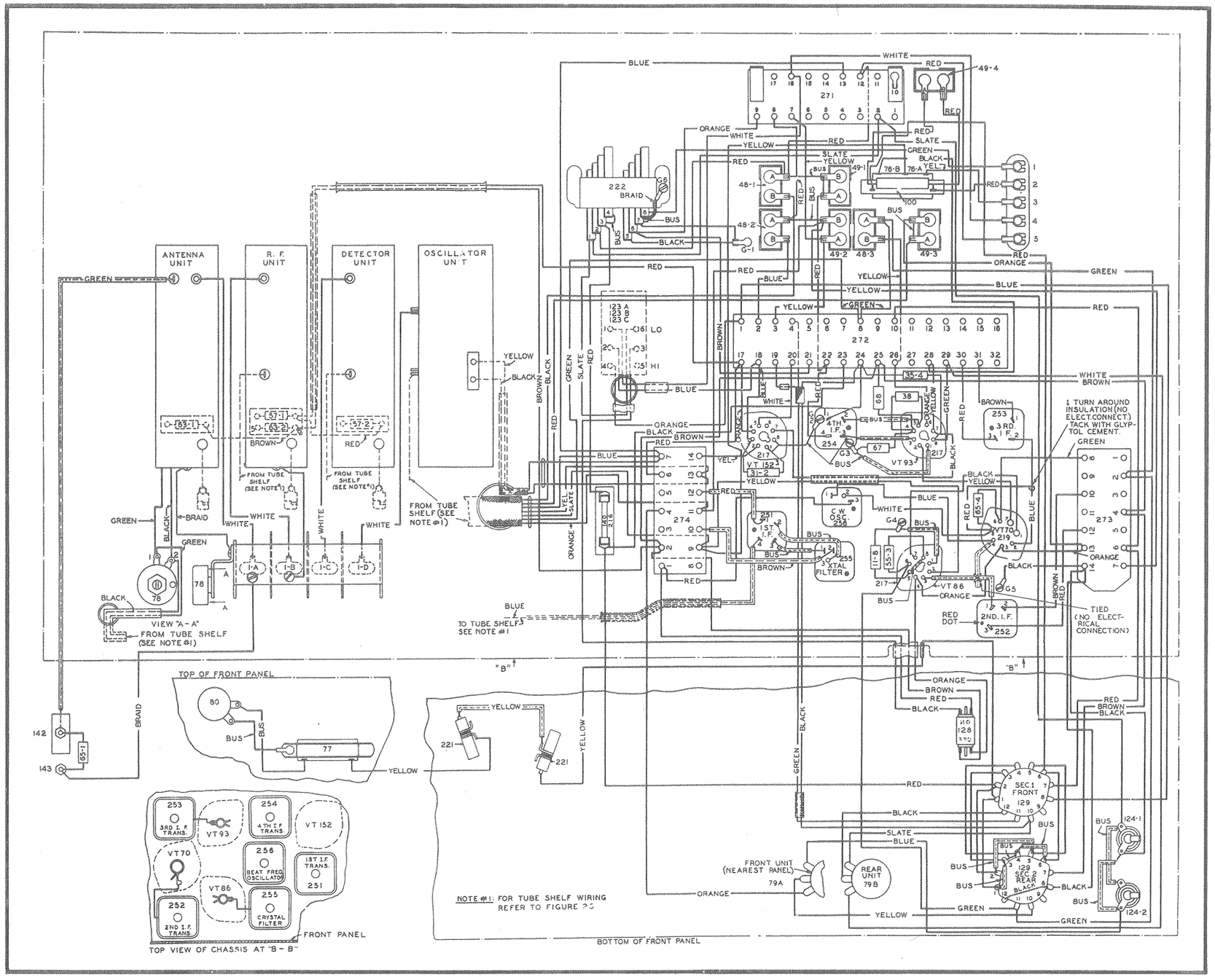

Figure 8–17. Radio Receiver BC-348-(*) or BC-224-(*) —Wiring Diagram